City of Pensacola

Architectural Review Board

Agenda

City of Pensacola
222 W. Main Street
Pensacola, FL 32502

March 21, 2024, 2:00 PM **Whibbs Conference Room, 1st Floor**

The meeting can be watched via live stream at cityofpensacola.com/video.

CALL TO ORDER / QUORUM

APPROVAL OF MINUTES

1. 24-305 ARCHITECTURAL REVIEW BOARD MEETING MINUTES

Attachments: *2-15-24_ARB minutes*

OPEN FORUM

NEW BUSINESS

2. 24-283 715 E. LA RUA STREET
OLD EAST HILL PRESERVATION DISTRICT / ZONE OEHR-2 / CITY COUNCIL DISTRICT 6
CHIMNEY REMOVAL AND ROOF REPLACEMENT AT A CONTRIBUTING STRUCTURE

Attachments: *Images*
Application and Materials

3. 24-284 109 S. ALCANIZ STREET
PENSACOLA HISTORIC DISTRICT / ZONE HC-1 / CITY COUNCIL DISTRICT 6
EXTERIOR ALTERATIONS AT A CONTRIBUTING STRUCTURE

Attachments: *Florida Master Site File Form*
Images
Application and Materials

4. 24-285 815 N. BAYLEN STREET
NORTH HILL PRESERVATION DISTRICT / ZONE PR-2 / CITY COUNCIL DISTRICT 6
NEW ACCESSORY DWELLING UNIT FOR A CONTRIBUTING STRUCTURE

Attachments: *Florida Master Site File Form*
Images
Application and Materials

5. 24-286 1200 N. BARCELONA STREET
NORTH HILL PRESERVATION DISTRICT / ZONE PR-1AAA / CITY COUNCIL DISTRICT 6
REAR YARD IMPROVEMENTS AT A CONTRIBUTING STRUCTURE

Attachments: *Florida Master Site File Form*
Application and Materials
Images

6. 24-287 50 W. BRAINERD STREET
NORTH HILL PRESERVATION DISTRICT / ZONE PR-1AAA / CITY COUNCIL DISTRICT 6
EXTERIOR ALTERATIONS AT A CONTRIBUTING STRUCTURE

Attachments: *Florida Master Site File Form*
Images
Application and Materials

7. 24-288 1015 N. REUS STREET
NORTH HILL PRESERVATION DISTRICT / ZONE PR-1AAA / CITY COUNCIL DISTRICT 6
CONCEPTUAL REVIEW FOR EXTERIOR ALTERATIONS AT A CONTRIBUTING STRUCTURE

Attachments: *Florida Master Site File Form*
Images
Application and Materials

8. 24-289 226 E. GOVERNMENT STREET
PENSACOLA HISTORIC DISTRICT / ZONE HC-1 / CITY COUNCIL DISTRICT 6
FINAL APPROVAL FOR SITE PLAN AND CARPORT AT A CONTRIBUTING STRUCTURE

Attachments: *Florida Master Site File Form*
Images
Application and Materials

9. 24-290 10 S. JEFFERSON STREET
PALAFOX HISTORIC BUSINESS DISTRICT / ZONE C-2A / CITY COUNCIL DISTRICT 6
FINAL APPROVAL FOR INTERNALLY ILLUMINATED ON-PREMISES MENU SIGNS FOR A NON-CONTRIBUTING STRUCTURE

Attachments: *Images*
Application and Materials
5-18-23 ARB minutes
Static Menu Sign Abbreviated Review Application

ADJOURNMENT

The City of Pensacola adheres to the Americans with Disabilities Act and will make reasonable accommodations for access to City services, programs and activities. Please call 850-435-1606 (or TDD 850-435-1666) for further information. Request must be made at least 48 hours in advance of the event in order to allow the City time to provide the requested services.

If any person decides to appeal any decision made with respect to any matter considered at such meeting, he will need a record of the proceedings, and that for such purpose he may need to ensure that a verbatim record of the proceedings is made, which record includes the testimony and evidence upon which the appeal is to be based.

City of Pensacola

ARCHITECTURAL REVIEW BOARD

MINUTES

City of Pensacola
222 W. Main Street
Pensacola, FL
32502

February 15, 2024	2:00 PM	Hagler-Mason Conference Room, 2nd Floor

CALL TO ORDER / QUORUM

Members Present: Anna Fogarty, Lou Courtney, Derek Salter, George R Mead, II, Yuri Ramos, Jordan Yee, Ross Pristera

Members Absent: Brian Spencer

Also Present: Assistant Planning & Zoning Division Manager Harding, Historic Preservation Planner Walker

APPROVAL OF MINUTES

1. 24-161 ARCHITECTURAL REVIEW BOARD MEETING MINUTES

Board Member Mead made a motion to approve the January 18, 2024, minutes, seconded by Board Member Ramos, and it carried 6-0.

OPEN FORUM

NEW BUSINESS

2. 24-148 129 CALLE DE SANTIAGO COURT
PENSACOLA HISTORIC DISTRICT / ZONE SSD / CITY COUNCIL DISTRICT 6
EXTERIOR ALTERATIONS AT A NON-CONTRIBUTING STRUCTURE

Brooks and Nicole Endacott are seeking approval for exterior alterations at a non-contributing structure including painting the brick façade with Benjamin Moore Edgecomb Gray and trim in Simply White, refinishing the front door and garage doors, painting the shutters to match the front and garage doors, replacing exterior light fixtures, replacing an exterior fiberglass side entry door, and installing three PVC or wood window boxes under the front windows.

Nicole Endacott presented to the board. Chairperson Salter asked the applicant which garden box is preferred. Ms. Endacott answered she is indifferent but would prefer a self-watering box.

Board Member Mead made a motion to approve. Board Member Courtney seconded the motion and it carried 6-0.

3. 24-149 115 W. BRAINERD STREET
NORTH HILL PRESERVATION DISTRICT / ZONE PR-1AAA / CITY COUNCIL DISTRICT 6
REAR YARD IMPROVEMENTS AT A CONTRIBUTING STRUCTURE

Lisa and Mike Bradley are seeking approval for rear yard improvements at a contributing structure including of a gunite swimming pool, replacing existing walkways with pavers, adding a paver patio, adding a retractable awning, repositioning an existing fence, and landscaping.

Lisa Bradley presented to the board. Board Member Mead noted that the North Hill Preservation Association has no objections to the request.

Board Member Ramos made a motion to approve the application as submitted. Board Member Fogarty seconded the motion and it carried 6-0.

4. 24-150 609 N. SPRING STREET
NORTH HILL PRESERVATION DISTRICT / ZONE PR-2 / CITY COUNCIL DISTRICT 6
EXTERIOR PAINT AND REAR IMPROVEMENTS AT A CONTRIBUTING STRUCTURE

Highpointe DBR LLC on behalf of William and Karen Goldsmith is seeking approval to paint the exterior of a contributing structure Benjamin Moore Amherst Gray with Monterey White for the railings and window trim and Essex Green for the trim and accents. The proposed rear alterations include a new attached pergola, closing one window with a permanent shutter, removal of one door to be replaced with three windows, moving and replacing one exterior door, a new deck, hardscaping, an outdoor kitchen, and reconfiguration of the exterior staircase.

Damian Schrey presented to the board. Chairperson Salter noted the North Hill Preservation Association had no objections other than matching the new aluminum railing to the existing, adjacent stair railing. Mr. Schrey answered there is no objection to matching the new railing to the existing. Board Member Yee asked if the new window to be permanently closed via a shutter will remain intact. Mr. Schrey answered yes, the window will remain with the shutter permanently closed, and the interior will receive sheetrock. Board Member Fogarty asked about the existing stairs and if the new stair configuration would keep the stained stair tread.

Mr. Schrey answered the stairs will be the same as the deck, in a beige color. Board Member Fogarty asked the same about the top rail. Mr. Schrey answered that the rails will also match the deck boards. If it is appealing, the green trim color might be used as an accent, but the current intent is to make the stairs entirely the deck board material. Board Member Ramos asked if the stair railings were to remain the same. Mr. Schrey answered yes. Chairperson Salter noted he has no objection to the proposed stairs but the preferred option is to match the existing stair rail since North Hill requested it.

Board Member Yee made a motion to approve as submitted with the change of the railings, but if the homeowner has an issue it must come back for abbreviated review. Board Member Fogarty seconded the motion and it carried 6-0.

5. 24-151 309 S. REUS STREET
GOVERNMENTAL CENTER DISTRICT / ZONE C-2 / CITY COUNCIL DISTRICT 6
CHANGE OF WINDOWS AT A NON-CONTRIBUTING STRUCTURE

Sarah Groeger is seeking approval to replace six windows with Custom Window Systems Series 8300I vinyl picture windows.

Sarah Groeger presented to the board. Chairperson Salter noted the existing windows are steel. Ms. Groeger noted the insurance company is requiring replacement. Chairperson Salter asked if the proposal is for a single picture window or what is existing with a mullion in the middle. Ms. Groeger noted a mullion or vertical element will be there but no horizontal elements. Chairperson Salter noted Governmental Center District Sec. 12-3-28(b)(2) stating the review should be in accordance with 12-3-10(1)d.1-3. and specifically section 2.ii.a. that in the case of a proposed alteration or addition to an existing building, that such alteration or addition will not impair the architectural or historical value of the building. Chairperson Salter stated that the review is subject to that section of the code and while the structure is not deemed contributing, it has been there since 1970 and is an iconic structure. Chairperson Salter pointed to the existing aluminum entrance door and aluminum roll down doors on the street frontage and around the side the entrances have been replaced with aluminum storefronts, which are commercial products. Vinyl products like what is being proposed are primarily residential in nature and using them on the building with the existing storefronts will compromise the architecture and character of the building. Chairperson Salter noted that an aluminum storefront system is more appropriate and will maintain the character of the building. The horizontal elements are not as important as the mullion in the center.

Board Member Mead agreed with Chairperson Salter's comments. Ms. Groeger asked the board if it would be acceptable to just replace the glass. Board Member Mead supported that proposition but noted there is often additional repair work needed. Advisor Pristera noted he can share a contact for metal sash work and/or could visit to inspect the windows. Advisor Pristera preferred to maintain the

horizontal elements. Board Member Yee echoed Board Member Mead and Chairperson Salter's comments. Board Member Fogarty also echoed the board's comments and preferred that the horizontal elements be maintained. Chairperson Salter asked Board Member Yee if an applied muntin would suffice. Board Member Yee answered yes. Board Member Ramos asked about the door or window on the west elevation. Ms. Groeger answered it is a garage door. Board Member Ramos noted the pattern on the garage door is appropriate and new windows should match that pattern.

Board Member Mead made a motion to deny the vinyl windows but approve for abbreviated review for commercial storefront with horizontal treatment consistent with the existing or the roll up door treatment or preferably a refurbishing of the existing sash and reglazing to preserve the windows at the applicant’s option and those be submitted for abbreviated review. Board Member Yee seconded the motion and it carried 6-0.

6. 24-152 706 E. LA RUA STREET
OLD EAST HILL PRESERVATION DISTRICT / ZONE OEHR-2 / CITY COUNCIL DISTRICT 6
NEW CONSTRUCTION OF LODGING HOUSE AND ACCESSORY STRUCTURES AT A CONTRIBUTING STRUCTURE

Dalrymple Sallis Architecture is seeking conceptual approval for a new 2.5 story multifamily lodging house and accessory structures to accompany a contributing structure. The lodging house will connect to the existing contributing structure by a covered walkway and site improvements will include a swimming pool, a small accessory structure, and screened parking. Please note the use of the attic space must be changed to meet the building code since the attic floor cannot be occupiable with a kitchen and restroom, which will be adjusted before returning for final review.

Nannette Chandler and Scott Sallis presented to the board. Ms. Chandler shared the history of the property and efforts to match the proposed structure to the existing contributing structure. Ms. Chandler noted that stormwater requirements will be addressed in the parking area and the third story is proposed for staff use for cooking, office space, and restroom use. Chairperson Salter shared the East Hill Neighborhood Association's comments including that the proposed structure should be built with a finished floor elevation of a minimum of 24 inches and the submitted plans propose that the structure be built on grade like other carriage homes. East Hill strongly disagrees with the characterization of the proposed structure as a "carriage house" among other supporting comments, to that point. East Hill had concerns about the aesthetic of the proposed parking lot in front of the proposed structure and would prefer parking to be to the side or rear. East Hill expressed that the applicant had not conformed to Preservation District standards and ARB approved plans on previous projects in Old East Hill. East Hill members

expressed additional concerns regarding two boutique hotels next to each other, traffic impacts, and loss of the sense of community.

Chairperson Salter invited the applicant to discuss the reason the building is at grade level. Ms. Chandler answered that the lot slopes down roughly 14 feet from front to back. The back of the structure will be at grade and the front will be at or exceed 24 inches. The other concern is meeting ADA requirements. Mr. Sallis noted that to meet city regulations, like being classified as R1, the building had to be lowered to meet ADA and also have an elevator. Chairperson Salter noted that this property sits on the corner of La Rua Street and 7th Avenue and the view from La Rua Street will be obstructed by the CMU wall between the parking lot and pool. The most visible street elevation, in concern to the 24 inch height, will be the 7th Avenue side. Chairperson Salter asked the applicants to discuss the view of the elevation change from the 7th Avenue view. Ms. Chandler answered there is not a porch on that side to have a 24 inch height and that the siding will go all the way down. Mr. Sallis noted many firewalls are required and what is shown in the packet is an accurate depiction. Chairperson Salter noted the exposed foundation on a street facing elevation is what typically requires the 18-24 inch height. Ms. Chandler noted there is an 8 foot hedge around the entire property and Chairperson Salter noted that hedges are less permanent.

Board Member Yee asked the applicants about the ADA strategy and pathway. Mr. Sallis answered the path is through a gate in the fence on a paved path to a ramp at the end of the covered porch to enter into Room 100 or office area on the ground floor. The path goes up and to the side. Board Member Mead agreed with the comments from East Hill, that if this is to read as a lodging structure, which it does in its current stylistic interpretation, it does not read as a carriage house which is the functional site relationship that is being sought. Board Member Mead noted he does not have a problem with a level transition, if it does not read as a lodging house and if it doesn't genuinely read as a carriage house. The overall massing and form that is proposed could do that. If the structure was simplified and all the Queen Anne details were removed, it would read more like a carriage house especially with added carriage doors. Board Member Mead noted that what is proposed does not accomplish the carriage house objective. Ms. Chandler noted there was once a carriage house in that location that has since been torn down and the intent is not to make the new structure look like a carriage house but just reuse the location. Ms. Chandler noted it is important to her to have all the Queen Anne details. Board Member Mead noted that it will then read like a second main house and that is part of the objection. The lack of footer highlights that this is a modern structure. Mr. Sallis noted that there was never intent to reflect a carriage house and this structure has always been planned to be a lodging house. Board Member Mead pointed to East Hill's comment quoting the term carriage house. Mr. Sallis noted that complying with all regulations and requirements on a historic property in a historic district is difficult. Mr. Sallis noted work will be done to the bell tower to make it more attractive.

Board Member Ramos noted that the new structure should match the existing structure if it will be lower than 24 inches. The ADA parking spot will need to connect to the entrance and there is opportunity to create a ramp. Board Member Ramos complimented the retention pond being handled in the parking lot. Board Member Ramos noted landscaping strategies could be employed to screen the parking area. For the final application, Board Member Ramos wants to see how the new addition relates to the existing structure in terms of massing and height, particularly the turret. Board Member Ramos noted that his preference is for the addition to match the floor levels of the existing structure and the turret could extend beyond. Ms. Chandler reiterated that the rear of the new structure will be slab on grade but the front will have height above grade due to the slope and noted that the floor levels are going to be closely matched to the existing. Ms. Chandler also noted, in relation to East Hill's comments, that the parking is in the rear where the existing driveway is located. Board Member Courtney noted the traffic increases in the neighborhood and the appearance of the structure as a hotel. Mr. Sallis noted that there are some options to work with the height of the foundation and ramp requirements.

Ms. Chandler noted the new construction is positioned where it is so that the existing structure is the primary focus and parking requirements dictated the site layout. Board Member Mead asked staff for the board's scope for review of the application. Historic Preservation Planner Walker answered the board is tasked with aesthetic review of the exterior in keeping with the historic character of the district and if the proposal meets the aesethic requirements of the Old East Hill district code. Board Member Yee asked if the proposed structure is accessory or a second primary structure. Assistant Planning and Zoning Division Manager Harding noted as this moves forward it becomes a commercial property and it is considered a primary structure. Board Member Ramos asked the current use. Assistant Planning and Zoning Division Manager Harding answered the use code on the Escambia County Property Appraiser is currently single family and the use would change to a lodging house which is allowed in OEHR-2 which is residential/office district. This zoning is transitional and fashioned after R-2. Board Member Yee echoed Board Member Ramos' request for the relationship between the existing and proposed structures and the elevation of the property. Board Member Mead asked the applicants for the design thought behind making the proposed construction a continuation of the existing structure. Ms. Chandler answered that a covered walkway is needed to move from one structure to the other, avoiding the elements. Board Member Mead reworded his question to be why must the new structure read like the existing structure because the new construction will end up looking like a new wing of the existing structure. It is not going to read like the original structure and the new wing appearance will compete. Mr. Sallis noted that the design team has never viewed the new construction as an addition or wing of the existing structure. Board Member Mead noted two local examples, one at 401 E. La Rua Street fronting on 6th Avenue and the other 105 W. Jackson Street, of new developments that fit the existing context.

Chairperson Salter noted he does not have a major issue with incorporating the style and elements of the existing structure into the proposed structure. The 7th Avenue elevation is important because it is the high side and will be a very visible presence. The juncture of the two structures is important and the current west elevation is unfinished. Chairperson Salter noted the tower is the biggest issue and that the west elevation looks like church architecture. By leaning toward church architecture, it will detract from the rest of the district's character. Chairperson Salter echoed the need for a visual depiction of the relationship between the two structures. The compromise needs to be found to address the design challenges. Chairperson Salter noted that the proposed dog-ear fence is not allowable in the district and asked Advisor Pristera about the appropriateness of the waddle fencing. Advisor Pristera noted the board has not seen examples of waddle fencing. Board Member Mead noted a historic photograph potentially shows a waddle fence in the Tanyard area of town. Chairperson Salter noted it is interesting and does not detract but wanted to bring it up for discussion. Mr. Sallis answered it is a creative way to screen the parking lot. Ms. Chandler noted the waddle is time period appropriate and is proposing it to screen vehicles with associated landscaping.

Board Member Ramos made a motion to not approve the application without prejudice. Board Member Ramos asked staff for the procedure to follow a rejection of the application. Historic Preservation Planner Walker answered that the applicants can return for a second conceptual review or bypass conceptual to return for final. Board Member Ramos noted that good discussion occurred that will lead to changes. Board Member Mead seconded the motion. Chairperson Salter clarified the rejection was based on the discussion topics and apparent lack of conformance with the characteristics of the neighborhood based on the floor elevation, heights, and architectural characteristic tie-in to the existing building. Board Member Ramos agreed to amend the motion and Board Member Mead seconded the motion. Chairperson Salter quoted Sec. 12-3-10(3)e.3.ii.b. relating to the character of the district. The motion carried 6-0.

Chairperson Salter noted that based on the discussion, the board is not against the development and look forward to the changes based on the discussion.

ADJOURNMENT

File #: 24-283 | Architectural Review Board | 3/21/2024

LEGISLATIVE ACTION ITEM

SUBJECT:

715 E. La Rua Street
Old East Hill Preservation District / Zone OEHR-2 / City Council District 6
Chimney Removal and Roof Replacement at a Contributing Structure

SUMMARY:

Josh Oberhausen is seeking approval to remove a chimney prior to replacing the roof on a contributing structure. The existing chimney stack is non-functional with a cap and was previously repaired with cement on two sides. The chimney stack is compromised on the interior and has no functional fireplaces. The chimney is not visible from the street frontage, but is visible from the side since it is on a corner lot.

RECOMMENDED CODE SECTIONS
Sec. 12-3-10(3)e.3.i.-ii.(a)(b) Old East Hill Preservation District; Procedure for review of plans; Decisions; General consideration and Rules governing decisions.
Sec. 120-3-10(3)g.1-2. OEHPD; Restoration, rehabilitation, alterations or additions to existing contributing structures in the Old East Hill preservation district.

ATTACHMENTS:

1. Images
2. Application and Materials

715 E. La Rua Street

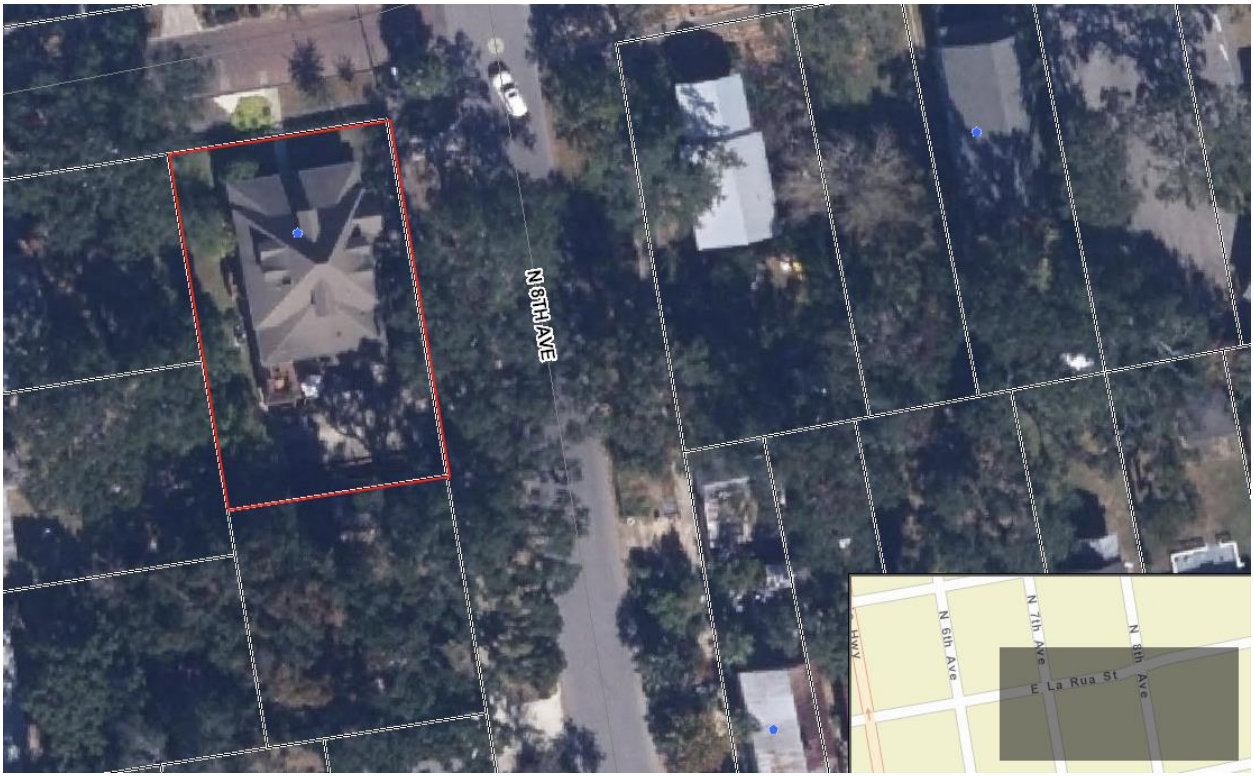



City of Pensacola
America's First Settlement
And Most Historic City

Architectural Review Board Application
Full Board Review

Application Date: 2-23-24

***Project Address*:** _____

Applicant: Josh Oberhausen

Applicant's Address: 715 E La Rua St Pensacola, FL 32501

Email: *joshoberhausen@gmail.com* Phone: 786-877-5485

Property Owner: _____
(If different from Applicant)

District: ☐ ***PHD*** ☐ ***NHPD*** ☑ ***OEHPD*** ☐ ***PHBD*** ☐ ***GCD***

Application is hereby made for the project as described herein:

☑ Residential Homestead – $50.00 hearing fee

☐ Commercial/Other Residential – $250.00 hearing fee

** An application shall be scheduled to be heard once all required materials have been submitted and it is deemed complete by the Secretary to the Board. You will need to include eight (8) copies of the required information. Please see pages 3 – 4 of this application for further instruction and information.*

Project specifics/description:

During roof replacement scheduled for the end of March 2024, we are adding a secondary water barrier, roof to wall hurricane clips and are submitting this application to remove a compromised chimney stack positioned at the back corner of the house visible from one side only. The chimney stack is topped, has no use, and was covered with cement mud on two sides by previous owner, which is unappealing and visible from one side. More concerning, the stack is not visible under the roof line from the crawl space or inside the home where it would exist, nor under the house, creating a significant structural and safety concern. The compromised, unsupported chimney creates a danger and hazard, resting just over owner/guest entry.

I, the undersigned applicant, understand that payment of these fees does not entitle me to approval and that no refund of these fees will be made. I have reviewed the applicable zoning requirements and understand that I must be present on the date of the Architectural Review Board meeting.

_____ 2-19-24

Applicant Signature Date

Compromised, dangerous chimney stack images











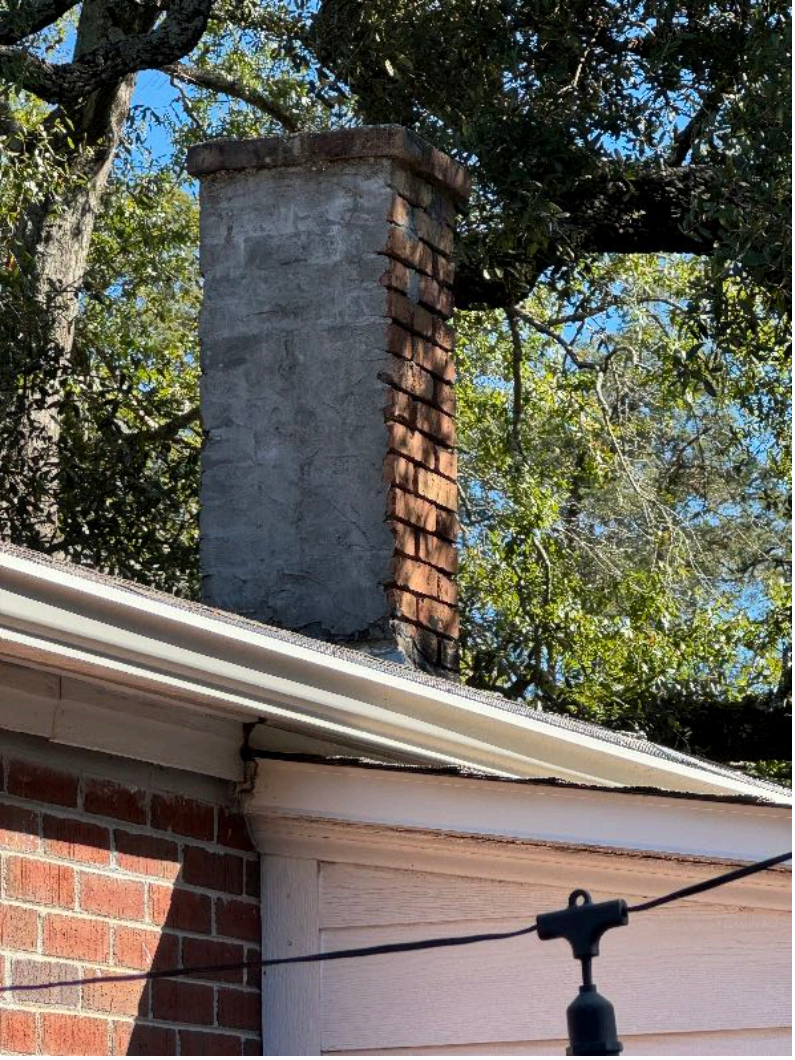



Unsightly cement covered chimney stack not visible from font of house, nor other three sides











Safety hazard at owner and guest entry







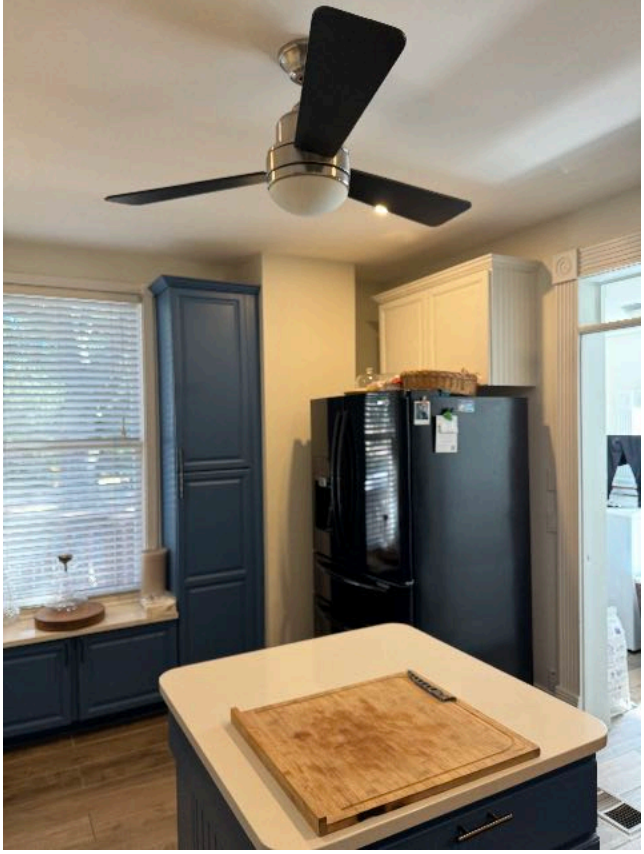

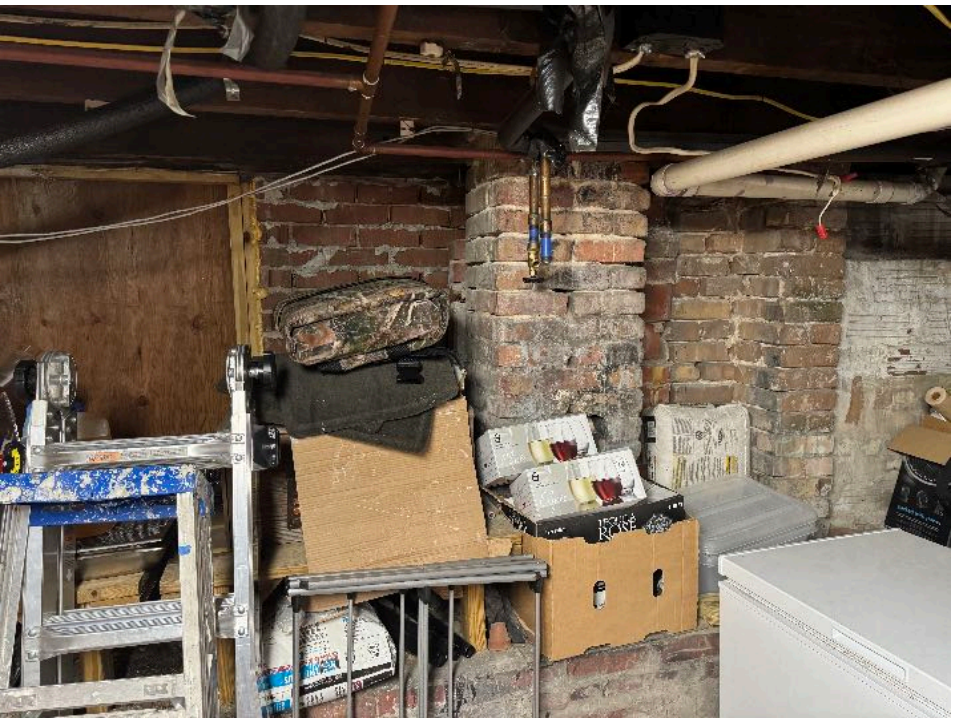

No visibility of unsupported, comprised stack under roof line in crawl space just underneath, inside the house just below, nor under the house at the same verticality, creating a structural and safety concern for owners, guests and the property.

City of Pensacola
America's First Settlement
And Most Historic City

Architectural Review Board Application
Board for Board Repair

Application Date: **2/14/2024**

***Project Address*:** **715 E La Rua Pensacola , FL 32501**

Applicant: **QUALITY ROOFING SOLUTIONS**

Applicant's Address: **715 E La Rua Pensacola , FL 32501**

Email: **KATIE@QUALITYROOFINGSOLUTIONS.COM** Phone: **850-777-0961**

Property Owner: **Josh Oberhausen**
(If different from Applicant)

District: ***PHD*** ☐ ***NHPD*** ☐ ***OEHPD*** ☑ ***PHBD*** ☐ ***GCD*** ☐

Project specifics/description:

RE-ROOF 40 SQS MOIRE BLACK WHITE DRIP EDGE

CERTAINTEED LANDMARK SHINGLES FL.5444.1; FL.17401.1 INSTALL HURRICANE CLIPS

REMOVING CHIMNEY DUE CHIMNEY CAUSING EXCESSIVE WATER DAMAGE TO ROOF STRUCTURE

(Office Use)

This request was reviewed and the Scope of Work described above was determined to be a Board for Board Repair. It is approved as follows:

APPROVED: _____ _____
Planning Services Staff *Date*

- Any variation from the Scope of Work approved above will require additional approval from the above signatory or the Architectural Review Board.
- The above signatory of City staff have the right to reject colors or signs which may be deemed to be controversial and will refer those requests to the ARB for review at a regularly scheduled meeting.
- You should be aware that this approval is for appropriateness of design only, and compliance with other City codes and ordinances may be required. The City Inspection Services can answer any questions that you may have in this regard. They may be reached at (850) 436-5600.

Planning Services
222 W. Main Street * Pensacola, Florida 32502
(850) 435-1670
Mail to: P.O. Box 12910 * Pensacola, Florida 32521

Board-for-Board Images

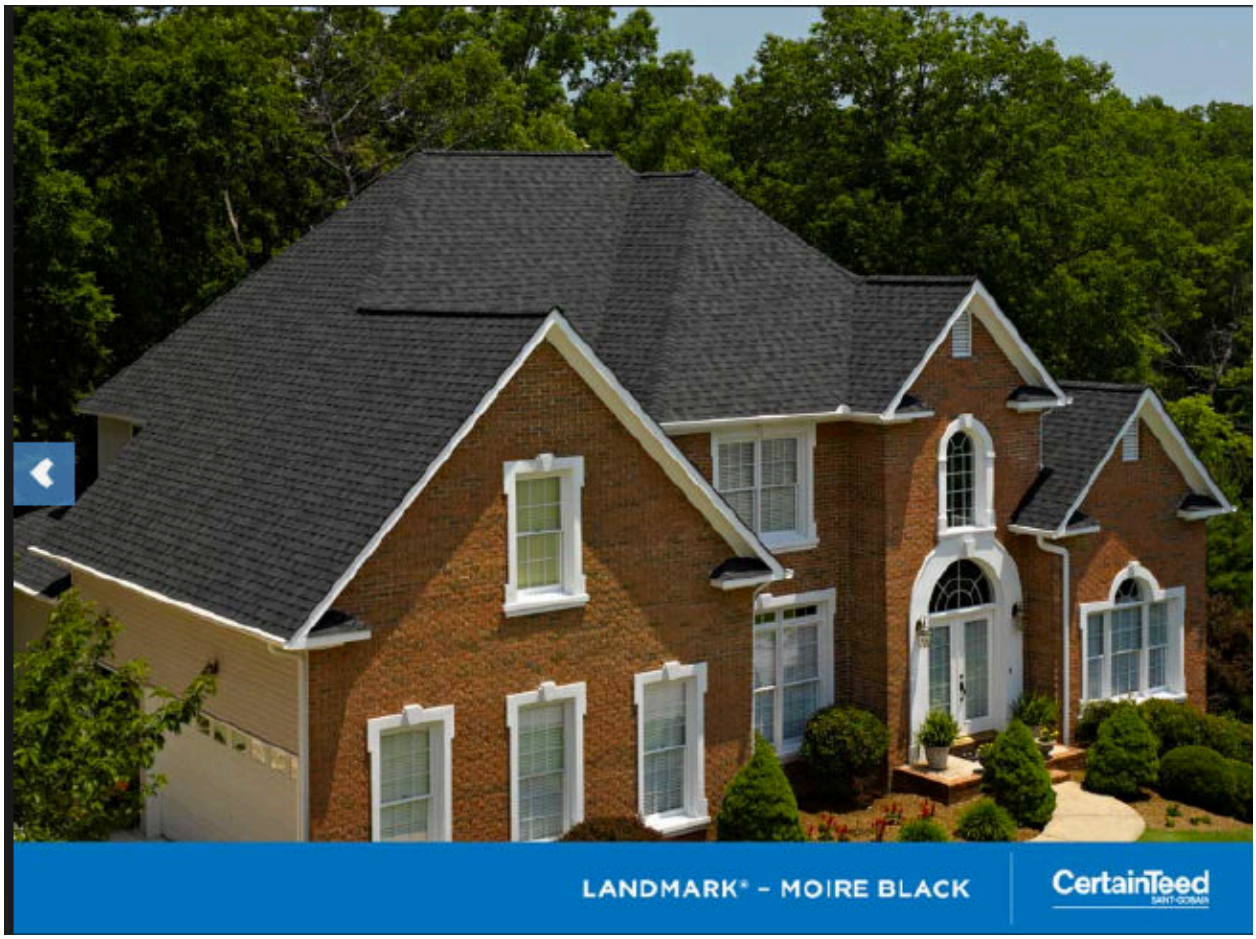



File #: 24-284 | Architectural Review Board | 3/21/2024

LEGISLATIVE ACTION ITEM

SUBJECT:

109 S. Alcaniz Street
Pensacola Historic District / Zone HC-1 / City Council District 6
Exterior Alterations at a Contributing Structure

SUMMARY:

Dalrymple Sallis Architecture is seeking approval for exterior alterations to a contributing structure, including removal of two rear windows and infilling with matching siding, repairing existing siding, painting the exterior, and minor landscaping.

RECOMMENDED CODE SECTIONS
Sec. 12-3-10(1)d.2.i.-ii. Pensacola Historic District; Procedure for review; Decisions; General consideration and Rules governing decisions.
Sec. 12-3-10(1)f. 6. PHD; Restoration, rehabilitation, alterations or additions to existing contributing structures in the historic district; Windows.

ATTACHMENTS:

1. Florida Master Site File Form
2. Images
3. Application and Materials

HISTORICAL STRUCTURE FORM
FLORIDA SITE FILE
Version 2.0 7/92

__ Original
x Update

Site #8 ES00996
Recorder #
Field Date 4/14/95
Form Date 7/28/95

SITE NAMES (addr. if none) 109 S. ALCANIZ ST. [MULT. LIST. #8]
SURVEY PENSACOLA HISTORIC DISTRICT [SURVEY # 4758]
NATIONAL REGISTER CATEGORY X building __structure X district __site __object

LOCATION & IDENTIFICATION

ADDRESS (Include N,S,E,W; st., ave., etc.) 109 S. ALCANIZ ST.
CROSS STREETS nearest/between BETW. E. INTENDENCIA ST. AND E. ROMANA ST.
NEAREST CITY/TOWN PENSACOLA IN CURRENT CITY LIMITS Xyes __no
COUNTY ESCAMBIA TAX PARCEL # 9001-002-210
SUBDIVISION NAME PENSACOLA HIST DIST BLOCK 23 LOT NO. port 120
OWNERSHIP __private-profit __priv-nonprofit Xpriv-indiv __priv-unspecified __city __county __state __federal __unknown
NAME OF PUBLIC TRACT (e.g., park) OLD CITY TRACT
ROUTE TO

MAPPING

USGS 7.5' MAP NAME 30087-D2-TF-024 1987
TOWNSHIP 2S RANGE 30W SECT. 46 1/4 1/4-1/4 IRREG. SECT.? __y __n
[UTM: ZONE 16 17 EASTING 0 NORTHING 0]
PLAT OR OTHER MAP (Map's name, location)

DESCRIPTION

STYLE FRAM EXTERIOR PLAN RECT NO. STORIES 1
STRUCTURAL SYSTEMS WF
FOUNDATION: Types PIER Materials BRIC
EXTERIOR FABRICS WTBD
ROOF: Types GA Materials SMCO
Secondary strucs. (dormers etc.)
CHIMNEY : No. 1 Materials BRIC LOCATIONS
WINDOWS (types, materials, and placements) DHS, 6/6, WOOD

MAIN ENTRANCE (stylistic details)
PORCHES: #open #closed #incised Locations E/1 STORY HIPPED PORCH WITH TURNED
Porch roof types POSTS, 3 BAY, ACCESS FROM EAST
EXTERIOR ORNAMENT

INTERIOR PLAN CONDITION: __excellent __good X fair __deteriorated __ruinous
SURROUNDINGS (N-None, S-Some, M-Most, A-All or nearly all) __commercial S residential __institutional __rural
ANCILLARY FEATURES (No., type of outbuildings; major landscape features)

ARCHAEOLOGICAL REMAINS AT SITE Archaeological form completed? _y _n (No-explain; yes-attach!)
Artifacts or other remains
NARRATIVE (E.g. description of interior, landscape, architecture, etc; please limit to 3 lines and attach full statement on separate sheet)

HISTORICAL STRUCTURE FORM

Site #8 _____

HISTORY

CONSTRUCTION DATE 1905 CIRCA x yes __ no
ARCHITECT: (last name first) UNKNOWN
BUILDER: (last name first) UNKNOWN
MOVES __yes __no Dates _____ Orig.addr. _____
ALTERATIONS __yes __no Dates _____ Nature _____
ADDITIONS __yes __no Dates _____ Nature _____
ORIGINAL USES (give dates) RESIDENCE
INTERMEDIATE USES (give dates) _____
PRESENT USES (give dates) VACANT
OWNERSHIP HISTORY (especially original owner) EDWARD BROWN (ORIGINAL), SERAPHINE ADILE FERGUSON AND HELEN PERKINS (CURRENT)

SURVEYOR'S EVALUATION OF SITE

Potentially elig. for local designation? _yes _no _insuff. info
Individually elig. for Nat. Register? _yes _no _insuff. info
Potential contributor to NR district? _yes _no _insuff. info

Local Designation Category
_____
_____

HISTORICAL ASSOCIATIONS (ethnic heritage, etc.) _____

EXPLANATION OF EVALUATION (required; limit to three lines; attach full statement on separate sheet)

CROSS-REFERENCES

BIBLIOGRAPHIC REFERENCES (Author, date, title, publication information. If unpublished, give FSF Manuscript Number, or location where available) _____

PHOTOGRAPHS (REQUIRED) B&W print(s) at least 3 x 5, at least one main facade. Label the back of the print with the FSF site number (site name if not available), direction and date of photograph: use pencil. Attach to back of the second to last page with a plastic or coated clip. Location of negatives/neg. nos. R6, F15-16

RECORDER

NAME (last first)/ADDR/PHONE/AFFILIATION HPPB

FOR DETAILED INSTRUCTIONS: *Guide to the 1992 Historic Structure Form of the Florida Site File.*

DHR USE ONLY	OFFICIAL EVALUATIONS	DHR USE ONLY
NR DATE / /	KEEPER-NR ELIGIBILITY*: y n pe ni	Date / /
DELIST DATE / /	SHPO-NR ELIGIBILITY*: y n pe ni	Date / /
	LOCAL DESIGNATION:	Date / /
	Local office	

* y=Yes; n=No; pe=Potentially Eligible; ni=Insufficient Information

REQUIRED:
(1) USGS MAP WITH STRUCTURE PINPOINTED
(2) LARGE SCALE STREET OR PLAT MAP
(3) PHOTO OF MAIN FACADE, PREFER B&W, AT LEAST 3X5

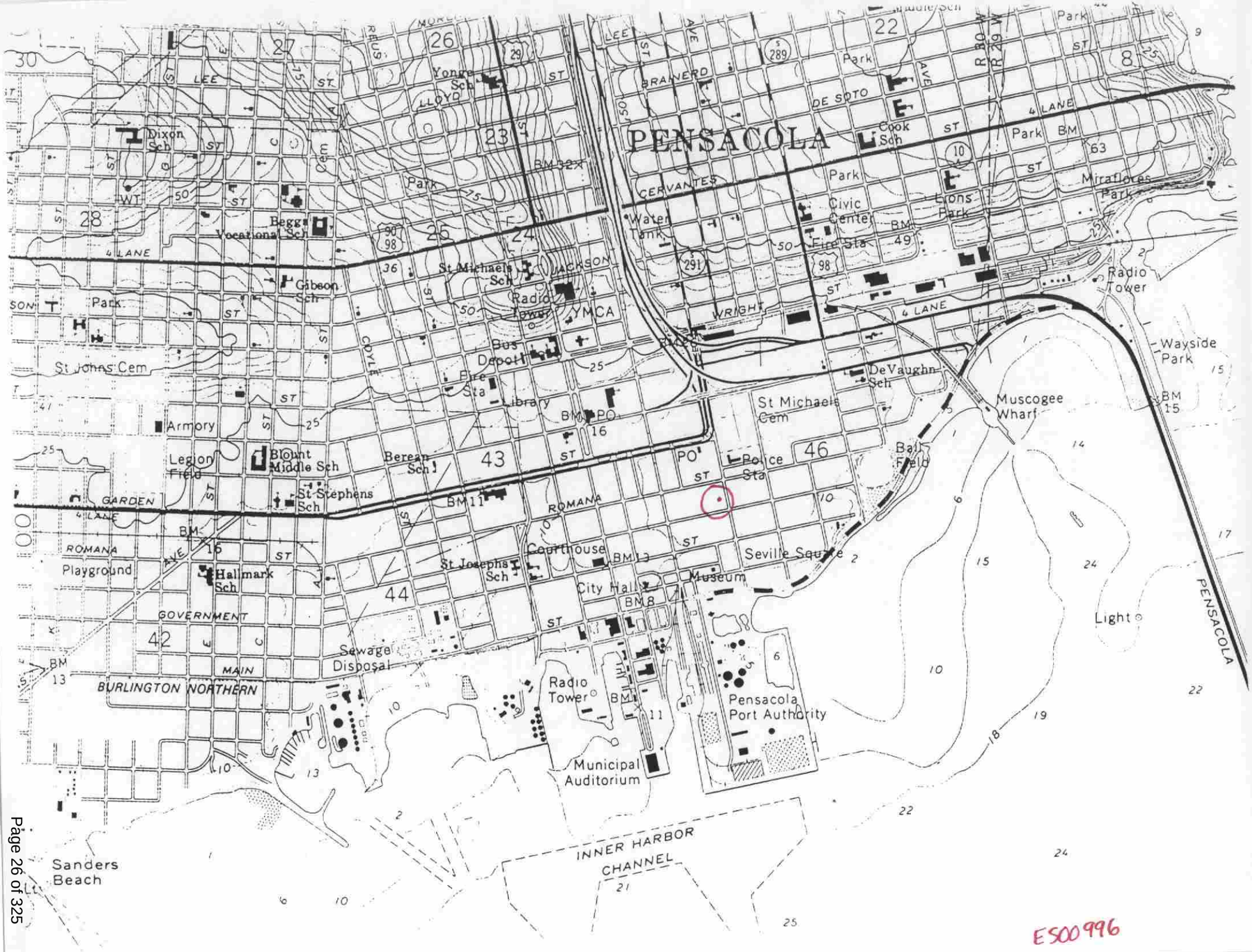
PENSACOLA
Yonge Sch
Dixon Sch
Beggs Vocational Sch
Gibson Sch
St Michaels Sch
Radio Tower
YMCA
Bus Depot
Fire Sta
Library
St Johns Cem
Armory
Legion Field
Blount Middle Sch
Berean Sch
St Stephens Sch
Playground
Hallmark Sch
St Josephs Sch
Courthouse
City Hall
Museum
Seville Square
Police Sta
St Michaels Cem
DeVaughn Sch
Ball Field
Muscogee Wharf
Wayside Park
Miraflores Park
Lions Park
Civic Center
Fire Sta
Water Tank
Cook Sch
Light
Sewage Disposal
Radio Tower
Municipal Auditorium
Pensacola Port Authority
Sanders Beach
INNER HARBOR CHANNEL
BURLINGTON NORTHERN
GOVERNMENT
MAIN
ROMANA
GARDEN
LEE
LLOYD
BRAINERD
DE SOTO
CERVANTES
WRIGHT
JACKSON
COYLE
4 LANE
PENSACOLA

ES00996

STATE OF FLORIDA
DEPARTMENT OF STATE
Division of Archives, History
and Records Management
DS-HSP-3AAA Rev. 3-79

FLORIDA MASTER SITE FILE
Site Inventory Form

FDAHRM 802= =
1009= =

Site No. ES996

Site Name 830= = Survey Date 8206 820= =

Address of Site: 109 S. Alcaniz St., Pensacola, FL 32501 905= =

Instruction for locating on W side of S. Alcaniz St. between E. Intendencia St. and E. Romana St. 813= =

Location: Old City Tract (subdivision name) 23 (block no.) Port. 210 (lot no.) 868= =

County: Escambia 808= =

Owner of Site: Name: Perry, Olive Sunday ;
Address: 1300 E. Scott St.
Pensacola, FL 32501 902= =

Type of Ownership Private 848= = Recording Date 832= =

Recorder:
Name & Title: Gantzhorn, Alan ;
Address: HPPB
818= =

Condition of Site: (Check One)
- [ ] Excellent 863= =
- [ ] Good 863= =
- [■] Fair 863= =
- [ ] Deteriorated 863= =

Integrity of Site: (Check One or More)
- [■] Altered 858= =
- [ ] Unaltered 858= =
- [■] Original Site 858= =
- [ ] Restored ( )(Date:)( ) 858= =
- [ ] Moved ( )(Date:)( ) 858= =

Original Use Residence 838= =
Present Use Residence 850= =
Dates: Beginning C+1900 844= =
Culture/Phase American 840= =
Period 20th Century 845= =

NR Classification Category: Building 916= =

Threats to Site: (Check One or More)
- [ ] Zoning ( )( )( ) 878= =
- [ ] Development ( )( )( ) 878= =
- [ ] Deterioration ( )( )( ) 878= =
- [ ] Borrowing ( )( )( ) 878= =
- [ ] Transportation ( )( )( ) 878= =
- [ ] Fill ( )( )( ) 878= =
- [ ] Dredge ( )( )( ) 878= =
- [ ] Other (See Remarks Below): 878= =

Areas of Significance: Architecture 910= =

Significance:

In 1905, this small frame dwelling was the home of Edward Brown, captain of the steamer Nellie Keyser. The house was built in 1900 by John Sunday as a rental unit.

SEE SITE FILE STAFF FOR ORIGINAL PHOTO(S) OR MAP(S)

ARCHITECT unknown 872 = =
BUILDER unknown 874 = =
STYLE AND/OR PERIOD Frame vernacular 964 = =
PLAN TYPE Rectangle 966 = =
EXTERIOR FABRIC(S) wood; clapboard w/ cornerboards 854 = =
STRUCTURAL SYSTEM(S) wood frame 856 = =
PORCHES E/ 1 story hipped porch w/ turned posts; 3 bay; access from E 942 = =
FOUNDATION: Piers; brick; wood latticework 942 = =
ROOF TYPE: Gable 942 = =
SECONDARY ROOF STRUCTURE(S): - 942 = =
CHIMNEY LOCATION: Center ridge 942 = =
WINDOW TYPE: DHS; 6/6; wood 942 = =
CHIMNEY: Brick 882 = =
ROOF SURFACING: metal; corrugated 882 = =
ORNAMENT EXTERIOR: - 882 = =
NO. OF CHIMNEYS 1 952 = = NO. OF STORIES 1 950 = =
NO. OF DORMERS 0 954 = =
Map Reference (incl. scale & date) USGS 7.5 Min Pensacola 1970 809 = =
Latitude and Longitude: ° ' " ° ' " 800 = =
Site Size (Approx. Acreage of Property): LT1 833 = =

LOCATION SKETCH OR MAP

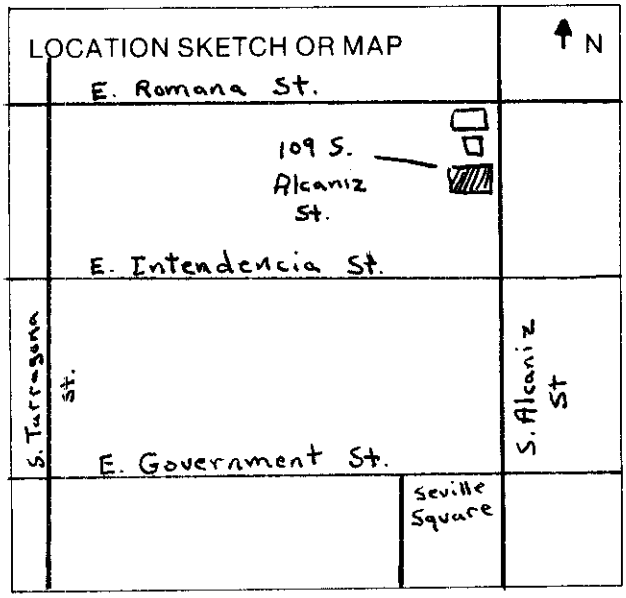

Township	Range	Section
2S	30W	46

812 = =

UTM Coordinates:

Zone Easting Northing 890 = =

Photographic Records Numbers HPPB P.82.15 Fr. 17 860 = =

Contact Print

Page 1

☐ Original
☒ Update

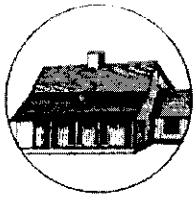

HISTORICAL STRUCTURE FORM
FLORIDA MASTER SITE FILE
Version 4.0 1/07

Site # 8 ES00996
Field Date 7-6-1997
Form Date 8-15-1997
Recorder # _____

Shaded Fields represent the minimum acceptable level of documentation.
Consult the *Guide to Historical Structure Forms* for detailed instructions.

Site Name(s) (address if none) EDWARD BROWN HOUSE — Multiple Listing (DHR only) _____
Survey Project Name FLORIDA FOLK ARCHITECTURE SURVEY — Survey # (DHR only) 21411
National Register Category (please check one) ☒ building ☐ structure ☐ district ☐ site ☐ object
Ownership: ☐ private-profit ☐ private-nonprofit ☐ private-individual ☒ private-nonspecific ☐ city ☐ county ☐ state ☐ federal ☐ Native American ☐ foreign ☐ unknown

LOCATION & MAPPING

	Street Number	Direction	Street Name	Street Type	Suffix Direction
Address:	109	S	ALCANIZ	Street	S

Cross Streets (nearest / between) ROMANO AND INTENDENCIA
USGS 7.5 Map Name PENSACOLA — USGS Date 1987 — Plat or Other Map TAX ASSESSORS, PENSACOLA
City / Town (within 3 miles) Pensacola — In City Limits? ☒ yes ☐ no ☐ unknown — County Escambia
Township 2S — Range 30W — Section 46 — ¼ section: ☐ NW ☐ SW ☐ SE ☐ NE — Irregular-name: _____
Tax Parcel # 9001-002-210 — Landgrant OLD CITY TRACT
Subdivision Name PENSACOLA HISTORIC DIST. — Block 22 — Lot 325
UTM Coordinates: Zone ☐ 16 ☐ 17 — Easting ☐☐☐☐☐☐ — Northing ☐☐☐☐☐☐☐
Other Coordinates: X: _____ Y: _____ — Coordinate System & Datum _____
Name of Public Tract (e.g., park) _____

HISTORY

Construction Year: 1905 ☒ approximately ☐ year listed or earlier ☐ year listed or later
Original Use Private Residence (House/Cottage/Cabin) — From (year): 1905 — To (year): _____
Current Use Abandoned/Vacant — From (year): _____ — To (year): _____
Other Use _____ — From (year): _____ — To (year): _____
Moves: ☐ yes ☐ no ☐ unknown — Date: _____ — Original address _____
Alterations: ☐ yes ☐ no ☐ unknown — Date: _____ — Nature _____
Additions: ☐ yes ☐ no ☐ unknown — Date: _____ — Nature _____
Architect (last name first): NONE — Builder (last name first): _____
Ownership History (especially original owner, dates, profession, etc.) EDWARD BROWN, SERAPHINE ADILE FERGUSON, HELEN PERKINS
Is the Resource Affected by a Local Preservation Ordinance? ☐ yes ☐ no ☐ unknown — Describe _____

DESCRIPTION

Style Frame Vernacular — Exterior Plan Rectangular — Number of Stories 1
Exterior Fabric(s) 1. Drop siding — 2. Shiplap — 3. _____
Roof Type(s) 1. Gable — 2. _____ — 3. _____
Roof Material(s) 1. Wood shingles — 2. Sheet metal:corrugated — 3. _____
Roof secondary strucs. (dormers etc.) 1. _____ — 2. _____
Windows (types, materials, etc.) DHS 9/9
Distinguishing Architectural Features (exterior or interior ornaments) FOLK VICTORIAN DETAILING IN BRACKETS
Ancillary Features / Outbuildings (record outbuildings, major landscape features; use continuation sheet if needed.) NONE

DHR USE ONLY	OFFICIAL EVALUATION	DHR USE ONLY
NR List Date _____ ☐ Owner Objection	SHPO – Appears to meet criteria for NR listing: ☐ yes ☐ no ☐ insufficient info — Date _____ — Init. _____ KEEPER – Determined eligible: ☐ yes ☐ no — Date _____ NR Criteria for Evaluation: ☐ a ☐ b ☐ c ☐ d (see *National Register Bulletin 15*, p. 2)	

HISTORICAL STRUCTURE FORM

Site #8 ES00996

DESCRIPTION (continued)

Chimney: No. 1 Chimney Material(s): 1. Brick 2. _____

Structural System(s): 1. Wood frame 2. _____ 3. _____

Foundation Type(s): 1. Piers 2. Slab

Foundation Material(s): 1. Brick 2. _____

Main Entrance (stylistic details) ONE DOOR WITH SINGLE LITE AND TRANSOM; TWO 9/9 WINDOWS TO SIDE; ASSYMETRICAL; GINGERBREAD BRACKETS (MANY MISSING)

Porch Descriptions (types, locations, roof types, etc.) ONE OPEN PORCH. (FRONT) FACADE FACING EAST. SHED ROOF JUTTING FROM GABLE END.

Condition (overall resource condition): ☐excellent ☐good ☐fair ☒deteriorated ☐ruinous

Narrative Description of Resource CLASSIC SHOTGUN COTTAGE ON PIERS WITH SIMPLE 2X2 BALUSTERS. TYPICAL EXAMPLE OF FOLK HOUSE TYPE FOUND IN CARIBBEAN AND THROUGHOUT SOUTHERN U.S.

Archaeological Remains HIGH PROBABILITY OF ARTIFACTS ON SITE. CLOSE TO ST. MICHAEL'S ☐Check if Archaeological Form Completed

RESEARCH METHODS (check all that apply)

☒FMSF record search (sites/surveys)	☒library research	☐building permits	☒Sanborn maps
☒FL State Archives/photo collection	☐city directory	☐occupant/owner interview	☒plat maps
☐property appraiser / tax records	☐newspaper files	☐neighbor interview	☐Public Lands Survey (DEP)
☐cultural resource survey (CRAS)	☐historic photos	☐interior inspection	☐HABS/HAER record search

☐other methods (describe) _____

Bibliographic References (give FMSF manuscript # if relevant, use continuation sheet if needed) _____

OPINION OF RESOURCE SIGNIFICANCE

Appears to meet the criteria for National Register listing individually? ☐yes ☒no ☐insufficient information

Appears to meet the criteria for National Register listing as part of a district? ☐yes ☐no ☒insufficient information

Explanation of Evaluation (required, whether significant or not; use separate sheet if needed) ARCHITECTURE PRIMARY SIG. HISTORICAL ASSOC. UNKNOWN. POTENTIALLY HISTORICALLY SIG. WITH FURTHER RESEARCH

Area(s) of Historical Significance (see *National Register Bulletin 15*, p. 8 for categories: e.g. "architecture", "ethnic heritage", "community planning & development", etc.)

1. Architecture
2. Ethnic heritage
3. Maritime history
4. Local
5. Community planning & development
6. _____

DOCUMENTATION

Accessible Documentation Not Filed with the Site File - including field notes, analysis notes, photos, plans and other important documents

1) Document type Field maps — Maintaining organization Historic Pensacola Preservation Board
Document description SANBORN MAPS; LOCAL SITE FILES — File or accession #'s 103 S. ALCANIZ

2) Document type Photographs — Maintaining organization Historic Pensacola Preservation Board
Document description PHOTO FILES BY ADDRESS — File or accession #'s 103 S. ALCANIZ

RECORDER INFORMATION

Recorder Name DR. DIANA GODWIN — Affiliation University of Central FL

Recorder Contact Information (address / phone / fax / e-mail) 2086 LAS VEGAS TRAIL, NAVARRE, FL (850)939-3001

Required Attachments

❶ USGS 7.5' MAP WITH STRUCTURE LOCATION PINPOINTED IN RED

❷ LARGE SCALE STREET, PLAT OR PARCEL MAP (available from most property appraiser web sites)

❸ PHOTO OF MAIN FACADE, ARCHIVAL B&W PRINT OR DIGITAL IMAGE FILE

If submitting an image file, it must be included on disk or CD AND in hard copy format (plain paper is acceptable).
Digital image must be at least 1600 x 1200 pixels, 24-bit color, jpeg or tiff.

109 S.ALCANIZ - Site File

HISTORICAL STRUCTURE FORM

Site #8: ***ES00996***

First site form recorded for this site? ***Update form for a site previously recorded at FSF***

Identifying code (field date): ***199707***

Cultural resource type: ***Historical Structure***

Form type code: ***NORMal form (new System 3 forms)***

Form status code: ***Newly Scattered Form (Needs Processing)***

Form quality ranking: ***Newly scattered form of standard quality***

Recorder #:

Field Date: ***07/06/1997***

Form Date: ***08/15/1997***

Staffer:

Date of FMSF computer entry: ***09/11/1997***

Site name(s): ***109 S.ALCANIZ***

[Other name(s)]: ***EDWARD BROWN HOUSE***

Mult. list #:

Survey names: ***FOLK ARCHITECTURE SURVEY***

Survey #:

National register category: ***Building***

LOCATION & IDENTIFICATION

Street Number/Direction/Name/Type/Suffix Direction: ***109/South/ALCANIZ/Street/South***

Cross streets nearest/between: ***ROMANO AND INTENDENCIA***

City/town: *PENSACOLA*

In current city limits? *Definitely within the limits of city*

County: *ESCAMBIA*

Tax parcel #: *9001-002-210*

Subdivision name: *PENSACOLA HISTORIC DIST.*

Block: *22*

Lot no.: *325*

Ownership type: *Private-unspecified***

Name of pubtract (e.g., park):

Route to (or vicinity of): *GO NORTH ON ALCANIZ FROM BAYFRONT PKWY*

MAPPING

USGS map name & year of publication/revision: *PENSACOLA/1987*

Township/Range/Section/Qtr: *2 South/30 West/46/***

Irregular section:

Landgrant: *OLD CITY TRACT*

UTM Zone/Easting/Northing: *** blank ***

Plat or other map (map's name, location): *TAX ASSESSORS, PENSACOLA CITY PLANNING; SANBORN*

DESCRIPTION

Style: *Frame Vernacular: Any date*

[Other style]: *SHOTGUN COTTAGE*

Exterior plan: *Rectangular*

[Other exterior plan]:

No. stories: *1*

Structural system(s): ***Wood frame***

[Other structural system(s)]:

Foundation types: ***Piers***

[Other foundation type]: ***S***

Foundation materials: ***Brick***

[Other foundation materials]:

Exterior fabrics: ***Drop siding*****;** ***Shiplap***

[Other exterior fabrics]

Roof types: ***Gable***

[Other roof types]:

Roof materials: ***Wood shingles*****;** ***Sheet metal: Corrugated***

[Other roof materials]:

Roof secondary structures (dormers etc):

[Other roof secondary structures]:

Chimney no.: ***1***

Chimney materials: ***Brick***

[Other chimney materials]:

Chimney locations: ***CENTER ROOF RIDGE***

Windows (types, materials, etc.): ***DHS 9/9***

Main entrance (stylistic details): ***ONE DOOR WITH SINGLE LITE AND TRANSOM; TWO 9/9 WINDOWS TO SIDE; ASSYMETRICAL; GINGERBREAD BRACKETS (MANY MISSING)***

# of open porches: ***1***

# of closed porches:

# of incised porches:

Porch locations: ***(FRONT) FACADE FACING EAST***

Porch roof types: ***SHED ROOF JUTTING FROM GABLE END***

Exterior ornament: ***FOLK VICTORIAN DETAILING IN BRACKETS***

Interior plan: ***Unknown Interior Plan***

[Other interior plan]:

Condition: ***Deteriorated***

Narrative description: ***CLASSIC SHOTGUN COTTAGE ON PIERS WITH SIMPLE 2X2 BALUSTERS. TYPICAL EXAMPLE OF FOLK HOUSE TYPE FOUND IN CARIBBEAN AND THROUGHOUT SOUTHERN U.S.***

Commercial surroundings (proportion): ***All or nearly all surroundings show quality (>90%)***

Residential surroundings (proportion): ***All or nearly all surroundings show quality (>90%)***

Institutional surroundings (proportion): ***All or nearly all surroundings show quality (>90%)***

Undeveloped surroundings (proportion): ***Some of surroundings show this quality (10 - 50%)***

Ancillary features (no., outbldings, etc.): ***NONE***

Artifacts or other remains: ***HIGH PROBABILITY OF ARTIFACTS ON SITE. CLOSE TO ST. MICHAEL'S CEMETARY.***

FMSF Archaeological form completed? ***No: Archaeological Form not done***

HISTORY

Construction year (e.g. C1933, 1936+, 1936-): ***C1905***

Architect (last name first): ***NONE***

Builder (last name first):

Status changes (moves, altrns, additns, etc):

Year of change:

Date change noted:

Nature of change:

Original, intermediate, present uses: ***Residence--private*****;** ***Vacant***

[Other uses]:

Year use started: ***C1905***

Year use ended:

Ownership history (esp. original owners): ***EDWARD BROWN, SERAPHINE ADILE FERGUSON, HELEN PERKINS***

Research methods: ***Florida Archives excluding Florida Site File*****;** ***Florida Site File for past architectural surveys*****;** ***Libraries searched locally-county histories, etc.*****;** ***Sanborn maps for this property consulted*****;** ***Plat or subdivision map for the property*****;*****Pedestrian*****

[Other research methods]:

SURVEYOR'S EVALUATION OF SITE

Potentially elig. for local designation? ***Eligible for local registry of significant sites***

Local register eligible for: ***HPPB AND PHS FILES***

Individually elig. for Nat. Register? ***Ineligible for NR, considered independently***

Potential contributor to NR district? ***Potential contributor, National Register district***

Area(s) of historical significance: ***Architecture*****;** ***Ethnic heritage*****;** ***Maritime history*****;** ***Local*****;** ***Community planning & development***

[Other historical associations]: ***SHOTGUN COTTAGE IN NR DISTRICT, PENSACOLA HISTORIC DIST. KNOWN LOCALLY AS SEVILLE HISTORIC DISTRICT***

Explanation of evaluation: ***ARCHITECTURE PRIMARY SIG. HISTORICAL ASSOC. UNKNOWN. POTENTIALLY HISTORICALLY SIG. WITH FURTHER RESEARCH***

DOCUMENTATION (PHOTOS, PLANS, ARTIFACTS)

Repository collection: ***Field maps at repository*****;** ***Photographs/Negatives at repository, describe***

Repository housed: ***Historic Pensacola Preservation Board*****;** ***Historic Pensacola Preservation Board***

Accession number: ***103 S. ALCANIZ***

Information & description: *SANBORN MAPS; LOCAL SITE FILES;; PHOTO FILES BY ADDRESS*

[Other repository information]: *NORMAN SIMONS RESEARCH CENTER, BEACON BL*

RECORDER

Recorder name: *DR. DIANA GODWIN*

Recorder address/phone: *2086 LAS VEGAS TRAIL, NAVARRE, FL (850)939-3001 PH.OR FAX*

Recorder affiliation: *University of Central Florida, Orlando*

[Other affiliation]: *GULF COAST HISTORICAL SOCIETY*

Memo information status:

Is text-only supplement file attached? *No supplement file needed*

Text-only supplement file status (FMSF): *Status of possible supplement is unchecked*




Property for Sale
Melonee
Olsen





109 S. Alcaniz Street





City of Pensacola
America's First Settlement
And Most Historic City

Architectural Review Board Application
Full Board Review

Application Date: 2-29-2024

***Project Address*:** **109 S Alcaniz St., Pensacola, FL 32502**

Applicant: Dalrymple | Sallis Architecture

Applicant's Address: 503 E. Government St., Pensacola, FL 32502

Email: *scott@dalsal.com* Phone: (850) 470-6399

Property Owner: David Mayo
(If different from Applicant)

District: ☑ ***PHD*** ☐ ***NHPD*** ☐ ***OEHPD*** ☐ ***PHBD*** ☐ ***GCD***

Application is hereby made for the project as described herein:

☑ Residential Homestead – $50.00 hearing fee

☐ Commercial/Other Residential – $250.00 hearing fee

** An application shall be scheduled to be heard once all required materials have been submitted and it is deemed complete by the Secretary to the Board. You will need to include eight (8) copies of the required information. Please see pages 3 – 4 of this application for further instruction and information.*

Project specifics/description:
PLEASE SPECIFY IF CONCEPTUAL DISCUSSION ITEM, CONCEPTUAL REVIEW, OR FINAL REVIEW.

Interior renovation of single story, raised floor, wood frame building. New work requires removal of existing window and painting and repairing of existing exterior siding, trim and railings.

I, the undersigned applicant, understand that payment of these fees does not entitle me to approval and that no refund of these fees will be made. I have reviewed the applicable zoning requirements and understand that I must be present on the date of the Architectural Review Board meeting.

J. Scott Sallis

Applicant Signature

2-29-2024

Date

Planning Services
222 W. Main Street * Pensacola, Florida 32502
(850) 435-1670
Mail to: P.O. Box 12910 * Pensacola, Florida 32521

dalrymple | sallis
architecture

213 S. Baylen St.
Pensacola, FL 32503

V 850.470.6399
F 850.470.6397
www.dalsal.com

Date: Thursday, February 29, 2024

Project: **Mayo Renovation**
109 S Alcaniz St., Pensacola, FL 32502

Recipient: Architectural Review Board – City of Pensacola

EXISTING SITE CONDITIONS

Project Location



dalrymple | sallis
architecture

213 S. Baylen St.
Pensacola, FL 32503

V 850.470.6399
F 850.470.6397
www.dalsal.com

EXISTING PHOTOGRAPHS







dalrymple | sallis
architecture

213 S. Baylen St.
Pensacola, FL 32503

V 850.470.6399
F 850.470.6397
www.dalsal.com

EXTERIOR COLOR SCHEDULE

Recipient: **Architectural Review Board – City of Pensacola**

ARCHITECTURAL ELEMENT	MANUFACTURER	COLOR
Wood Siding	Sherwin Williams	"Dishy Coral"
Wood Trim	Sherwin Williams	"Marshmallow"
Architectural Grade Running Trim	Sherwin Williams	"Marshmallow"
Column/Beams	Sherwin Williams	"Marshmallow"
Ceilings	Sherwin Williams	"Marshmallow"
Fascia	Sherwin Williams	"Marshmallow"
Front Porch	Sherwin Williams	"Marshmallow
Entry Door	-	Existing
Window/Door Headers	Sherwin Williams	"Marshmallow"
Roofing	Owens Corning	Oakridge Estate Gray
Covered Porch Roofing	Metal Sales	Oakridge Estate Gray

dalrymple | sallis
architecture

213 S. Baylen St.
Pensacola, FL 32503

V 850.470.6399
F 850.470.6397
www.dalsal.com

PAINT COLORS

SW 6598
Dishy Coral
Interior / Exterior
Location Number: 107-C3

SW 7001
Marshmallow
Interior / Exterior
Location Number: 267-C1

Wood Siding
Sherwin Williams "Dishy Coral"

Wood Accent
Sherwin Williams "High Reflective White"

ROOFING



Existing Asphalt Shingles

Owens Corning "Oakridge Estate Gray"

OTHER MATERIALS



Existing & Infill Siding
1 x 4 in. Wood Siding





Existing Lattice
Sherwin Williams "Marshmallow"
Match Existing Residence

dalrymple | sallis
architecture

213 S. Baylen St.
Pensacola, FL 32503

V 850.470.6399
F 850.470.6397
www.dalsal.com

PLANTING

BOXWOOD



GARDENIA BUSH



Gardenia

SEASONAL FLOWERS



Camellias



Hydrangeas

Mayo Renovation

ONE-STORY WOOD FRAMED RESIDENCE

109 S Alcaniz St., Pensacola 32502

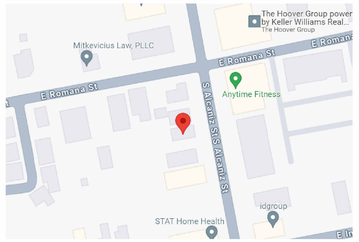

VICINITY MAP

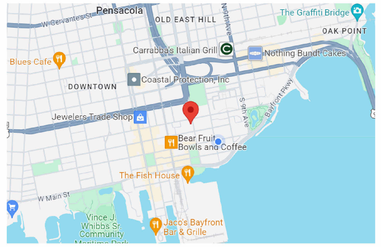

SITE MAP



FEMA FLOOD MAP

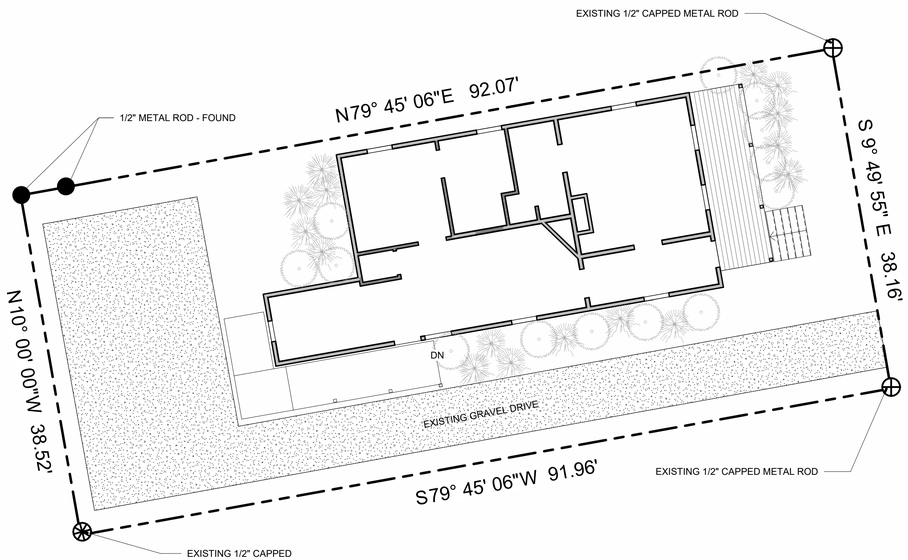

2 ARCHITECTURAL SITE PLAN

1/8" = 1'-0"

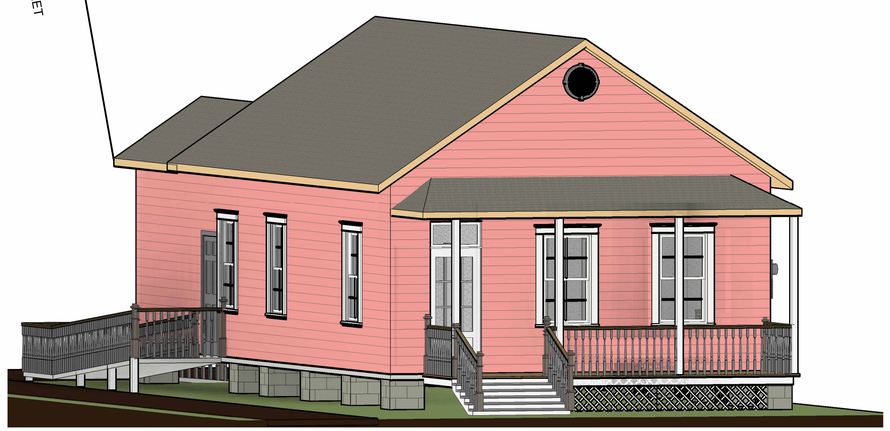

1 3D RENDERING

PROJECT TEAM:

ARCHITECT OF RECORD :
J. SCOTT SALLIS, AIA scott@dalsal.com
DALRYMPLE | SALLIS ARCHITECTURE
503 E. GOVERNMENT ST.
PENSACOLA, FL 32502
(850) 470-6399

BUILDING DATA

APPLICABLE CODES:
2023 FLORIDA BUILDING CODE, RESIDENTIAL
FLORIDA FIRE PREVENTION CODE, 8th EDITION

CONSTRUCTION TYPE:
TYPE VB: UNPROTECTED, UNSPRINKLERED

OCCUPANCY CLASSIFICATION:
RESIDENTIAL (R-3) - SINGLE FAMILY DWELLING UNIT

ZONED: HC-1

FLOOD ZONE: ZONE X

PHYSICAL PROPERTIES:
BUILDING HEIGHT:

ACTUAL HEIGHT: 19'-0"

NO. OF STORIES:

ACTUAL NUMBER OF STORIES: 1

INDEX OF DRAWINGS

Sheet Number	Sheet Title	Rev. #
General		
G001	TITLE SHEET	
Architectural		
A101	DEMOLITION AND NEW WORK PLAN	
A201	EXTERIOR ELEVATIONS	

BUILDING AREA TOTALS

LEVEL	AREA	COMMENTS
GROUND LEVEL		
GROUND LEVEL	971 SF	
TOTAL BUILDING AREA (CONDITIONED)	971 SF	

GENERAL NOTES

1. TO THE BEST OF OUR KNOWLEDGE, THESE DRAWINGS COMPLY WITH THE APPLICABLE REQUIREMENTS OF THE FLORIDA BUILDING CODE, 2023 EDITION
2. CONTRACTOR TO COMPLY WITH REQUIREMENTS OF THE FLORIDA BUILDING CODE, AND ALL OTHER APPLICABLE FEDERAL, STATE AND LOCAL CODES, STANDARDS, REGULATIONS AND LAWS.
3. ALL REFERENCED STANDARDS REFER TO THE EDITION IN FORCE AT THE TIME THESE ARE ISSUED.
4. CONTRACTOR TO REVIEW ALL CONTRACT DOCUMENTS, DIMENSIONS AND SITE CONDITIONS AND COORDINATE WITH FIELD DIMENSIONS AND PROJECT SHOP DRAWINGS PRIOR TO CONSTRUCTION. REPORT ANY DISCREPANCIES IN WRITING TO ARCHITECT. DO NOT CHANGE SIZE OR DIMENSIONS OF STRUCTURAL MEMBERS WITHOUT WRITTEN INSTRUCTIONS FROM THE ARCHITECT OF RECORD.
5. ANY DISCREPANCIES, OMISSIONS OR VARIATIONS NOTED IN THE CONSTRUCTION DOCUMENTS OR DISCOVERED DURING CONSTRUCTION SHALL BE IMMEDIATELY COMMUNICATED IN WRITING TO THE ARCHITECT FOR HIS REVIEW. CONTRACTOR SHALL BE RESPONSIBLE FOR ALL ASSUMPTIONS OF CONSTRUCTION DOCUMENTS NOT VERIFIED IN WRITING BY THE ARCHITECT OF RECORD.
6. PROTECT EXISTING FACILITIES, STRUCTURES AND UTILITY LINES FROM ALL DAMAGE. EACH CONTRACTOR SHALL PROTECT HIS WORK, ADJACENT PROPERTY AND THE PUBLIC. EACH CONTRACTOR IS SOLELY RESPONSIBLE FOR DAMAGE OR INJURY DUE TO HIS ACT OR NEGLECT.
7. THE CONTRACTOR IS SOLELY RESPONSIBLE FOR JOB SAFETY AND CONSTRUCTION PROCEDURES.
8. DO NOT SCALE DRAWINGS; USE DIMENSIONS.
9. DETAILS LABELED "TYPICAL DETAILS" ON THE DRAWINGS APPLY TO ALL SITUATIONS THAT ARE THE SAME OR SIMILAR TO THOSE SPECIFICALLY DETAILED. SUCH DETAILS APPLY WHETHER OR NOT THEY ARE KEYED IN AT EACH LOCATION. QUESTIONS REGARDING APPLICABILITY OF TYPICAL DETAILS SHALL BE RESOLVED BY THE ARCHITECT.
10. PRODUCT SUBSTITUTION SHALL BE MADE SUBJECT TO FULL COMPLIANCE WITH THE CRITERIA NOTED HEREON, ANY SUCH SUBSTITUTION SHALL BE SUBJECT TO PRIOR APPROVAL BY THE DESIGN PROFESSIONAL AND THE LOCAL BUILDING AUTHORITY HAVING JURISDICTION.
11. PRIOR TO COMMENCEMENT OF THE WORK, PROVIDE THE ARCHITECT WITH A PROPOSED SUBMITTAL SCHEDULE. ALLOW, AT MINIMUM, (12) BUSINESS DAYS FOR EACH SUBMITTAL REVIEW. NO EXTENSION OF THE CONTRACT TIME OR INCREASE IN THE CONTRACT SUM WILL BE AUTHORIZED BECAUSE OF FAILURE TO TRANSMIT SUBMITTALS ENOUGH IN ADVANCE OF THE WORK TO PERMIT PROCESSING, INCLUDING RESUBMITTALS.
12. COMPLY WITH 2023 FBC, RESIDENTIAL EDITION R301.2.1.2 FOR RESIDENTIAL WORK OR 2023 FBC 1609.1.2 FOR COMMERCIAL WORK REGARDING OPENING PROTECTION. FOR R-3 OCCUPANCIES ONLY, OPTION TO PROVIDE FLORIDA PRODUCT APPROVED IMPACT RESISTANT GLAZING PRODUCT, OR WIND LOAD APPROVED WINDOWS PROTECTED WITH FLORIDA PRODUCT APPROVED OPENING PROTECTION SYSTEM. IF LATTER OPTION IS USED, PROVIDE (2) COPIES OF MARKED INSTALLATION INSTRUCTIONS FOR ANCHOR SIZE, SPACING, MOUNTING TYPE, ETC.

ELEVATION REFERENCES

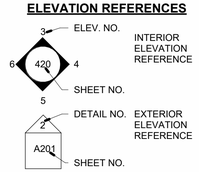

DETAIL REFERENCES

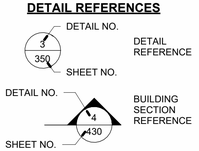

ANNOTATION REFERENCES

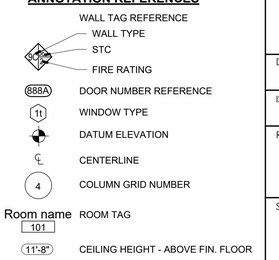

REVISION NUMBER REFERENCE

1 REVISION NO.

dalrymple | sallis
architecture
503 E. Government St.
Pensacola, FL 32502
v: 850-470-6399
f: 850-470-6397
www.dalsal.com
AR 0016385

THIS DOCUMENT SHOWS ORIGINAL AND UN-PUBLISHED WORK OF THE ARCHITECT AND MAY NOT BE DUPLICATED IN ANY PART WITHOUT WRITTEN CONSENT OF THE FIRM'S PRINCIPALS

CERTIFICATION

DESIGN DEVELOPMENT NOT FOR CONSTRUCTION

Mayo Renovation

109 S Alcaniz St., Pensacola 32502

DRAWN BY:	CHECKED BY:
CVB	JSS

ISSUE DATE: 2-29-2024

REVISIONS:
No. Desc. Date

SHEET TITLE: **TITLE SHEET**

SHEET NO: **G001**

PROJECT NO: 24008

DEMOLITION NOTES

1. IN PERFORMING OF THE DESIGN CONTRACT, THE ARCHITECT WILL MAKE CERTAIN ASSUMPTIONS REGARDING EXISTING STRUCTURES AND CONDITIONS. INSOMUCH AS SOME ASSUMPTIONS WILL NOT BE VERIFIED BECAUSE OF THE COST INVOLVED OR TO AVOID DISRUPTION OR DESTRUCTION OF PROPERTY, THE ARCHITECT DOES NOT WARRENT THAT HIS DESIGN WILL CORRESPOND TO ACTUAL FIELD CONDITIONS. EXISTING CONDITIONS WHICH VARY FROM DESIGN ASSUMPTIONS MAY REQUIIRE DESSIGN ALTERATIONS WHICH MAY INCREASE DESIGN AND CONSTRUCTION COSTS.
2. GENERAL CONTRACTOR TO VERIFY EXISTING UTILITY LOCATIONS BEFORE COMMENCING WORK.
3. DISCONNECT EXISTING UTILITIES AS REQUIRED FOR NEW WORK.
4. RECYCLE AS MUCH DEBRIS AND WASTE MATERIALS AS POSSIBLE. DISPOSE OF WASTE OFF SITE.

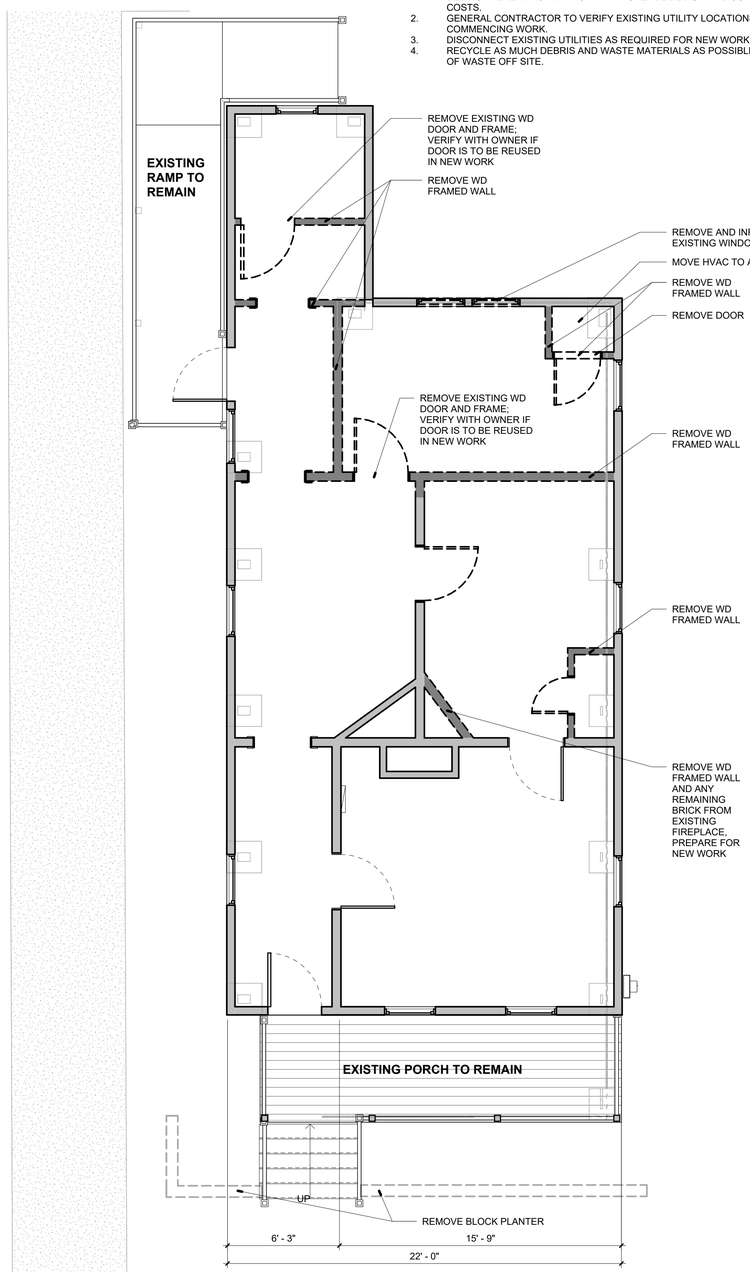

2 DEMOLITION PLAN

1/4" = 1'-0"

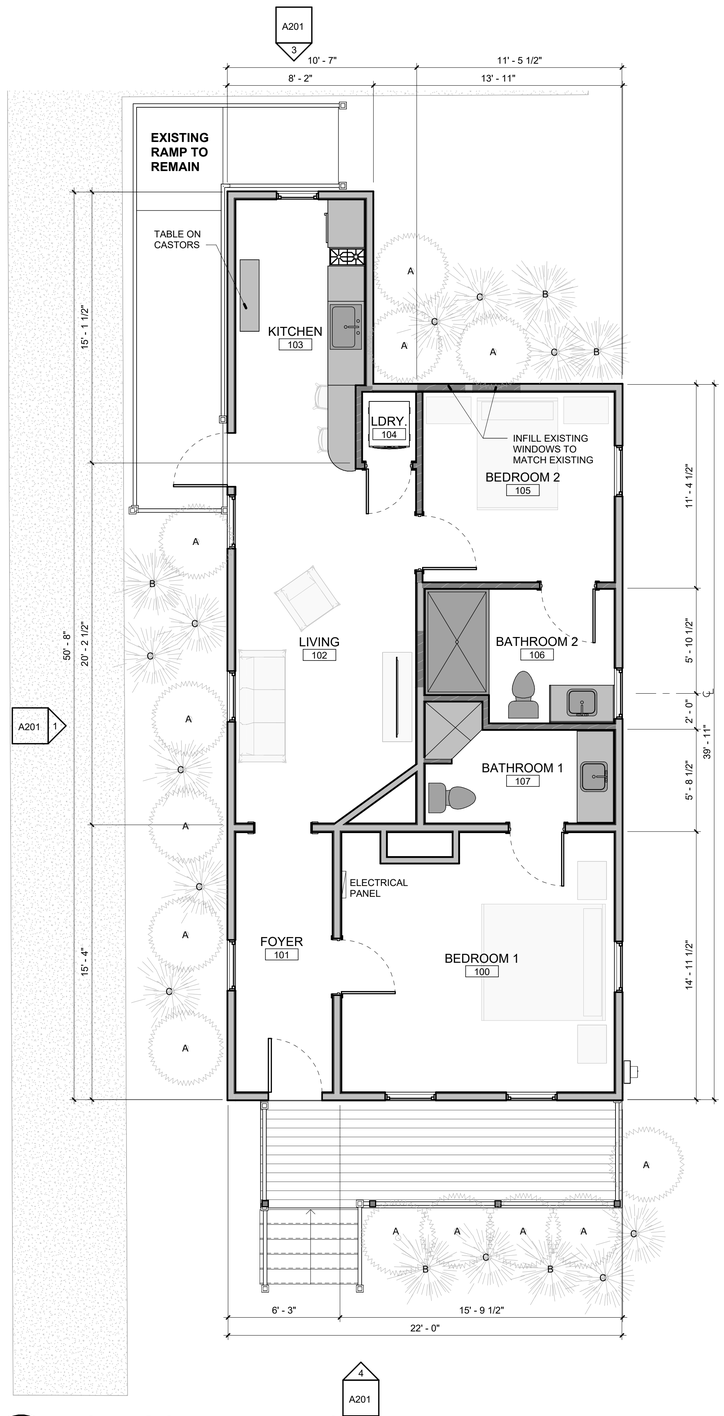

1 FIRST FLOOR AND LANDSCAPE PLAN

1/4" = 1'-0"

NEW WORK NOTES

1. PROVIDE STREET ADDRESS WITH MIN. 6" HIGH LETTERS ON BUILDING EXTERIOR VISIBLE FROM VEHICLE APPROACH.
2. VERIFY ALL MATERIALS AND FINISHES WITH THE OWNER/ARCHITECT.
3. CONTRACTOR TO COORDINATE WITH OWNER/SUBCONTRACTOR FOR ALL AUDIO/VISUAL WORK.
4. ALL IRRIGATION AND LANDSCAPING PROVIDED BY OWNER.
5. PROVIDE ACOUSTICAL INSULATION AT ALL NEW BEDROOM AND BATHROOM WALLS.
6. EXTERIOR EGRESS DOORS NOT TO HAVE DOUBLE CYLINDER KEY LOCKS.
7. ENSURE ALL TILED SHOWERS UTILIZE A SCHLUTER SYSTEM KERDI SHOWER KIT. ANY BUILT-IN SHOWER BENCHES MUST BE BUILT OUT OF SCHULTER SYSTEM KERDI BOARD SHOWER FOAM OR CMU BLOCK. WOOD FRAMED SHOWER SEATS ARE NOT ACCEPTABLE.
8. SET ALL NEW STUD WALL SILL PLATES ON NEOPRENE TAPE TO SEPARATE FRAMING MATERIAL FROM CONCRETE.
9. PROVIDE STRETCH TAPE FLASHING SURROUNDING ALL WALL PENETRATIONS BY PIPES AND EXHAUST DUCTS AS PER MFR. STANDARDS.

LANDSCAPE KEY	
TYPE MARK	DESCRIPTION
A	MEDIUM - BOXWOOD BUSH
B	MEDIUM - GARDENIA BUSH
C	SMALL - CAMELLIAS

2 A201

dalrymple | sallis architecture
503 E. Government St.
Pensacola, FL 32502
v: 850-470-6399
f: 850-470-6397
www.dalsal.com
AR 0016385

THIS DOCUMENT SHOWS ORIGINAL AND UN-PUBLISHED WORK OF THE ARCHITECT AND MAY NOT BE DUPLICATED IN ANY PART WITHOUT WRITTEN CONSENT OF THE FIRM'S PRINCIPALS

CERTIFICATION

DESIGN DEVELOPMENT NOT FOR CONSTRUCTION

Mayo Renovation

109 S Alcaniz St., Pensacola 32502

DRAWN BY:	CHECKED BY:
CVB	JSS

ISSUE DATE: 2-29-2024

REVISIONS

No.	Des.	Date

SHEET TITLE: **DEMOLITION AND NEW WORK PLAN**

SHEET NO: **A101**

PROJECT NO: 24008

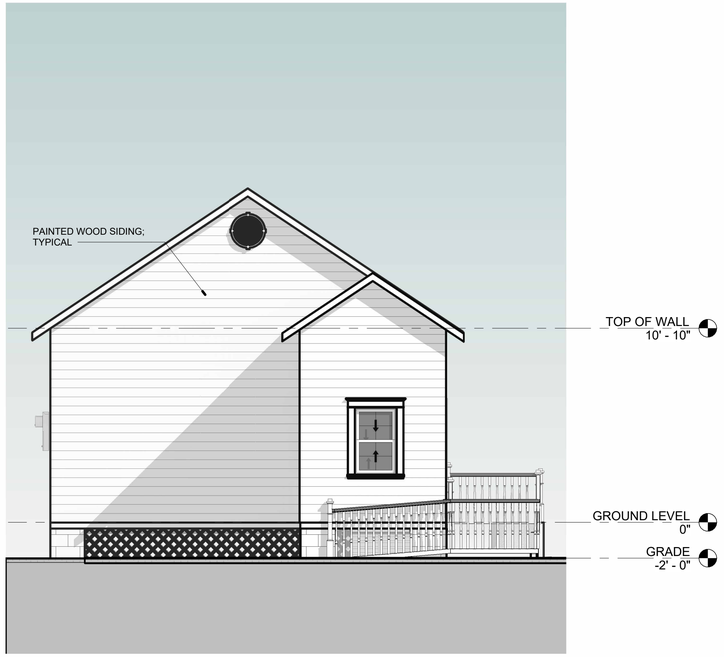

3 WEST ELEVATION
1/4" = 1'-0"



1 SOUTH ELEVATION
1/4" = 1'-0"

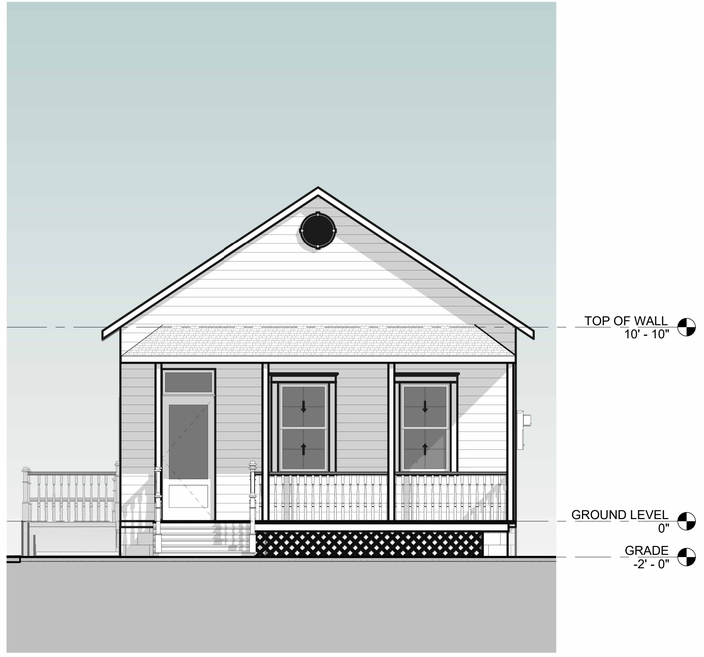

4 EAST ELEVATION
1/4" = 1'-0"



2 NORTH ELEVATION
1/4" = 1'-0"

dalrymple | sallis
architecture
503 E. Government St.
Pensacola, FL 32502
v: 850-470-6399
f: 850-470-6397
www.dalsal.com
AR 0016385

THIS DOCUMENT SHOWS ORIGINAL AND UN-PUBLISHED WORK OF THE ARCHITECT AND MAY NOT BE DUPLICATED IN ANY PART WITHOUT WRITTEN CONSENT OF THE FIRM'S PRINCIPALS

CERTIFICATION

DESIGN DEVELOPMENT NOT FOR CONSTRUCTION

Mayo Renovation

109 S Alcaniz St., Pensacola 32502

DRAWN BY:	CHECKED BY:
CVB	JSS

ISSUE DATE: 2-29-2024

REVISIONS

No.	Des.	Date

SHEET TITLE: **EXTERIOR ELEVATIONS**

SHEET NO: **A201**

PROJECT NO: 24008

File #: 24-285 | Architectural Review Board | 3/21/2024

LEGISLATIVE ACTION ITEM

SUBJECT:

815 N. Baylen Street
North Hill Preservation District / Zone PR-2 / City Council District 6
New Accessory Dwelling Unit for a Contributing Structure

SUMMARY:

Scott Sallis is seeking approval for a new single story accessory structure in the rear yard of a contributing structure. The raised structure will be built on brick piers with composite siding, a fiberglass entry door, Jeld-Wen V-2500 series clad wood windows, a standing seam metal roof in Ash Grey, in addition to limited landscaping. The structure will be painted Rookwood Dark Green from the Sherwin Williams historic palette.

RECOMMENDED CODE SECTIONS
Sec. 12-3-10(2)d.2.i-ii.(a)(b) North Hill Preservation District; Procedure for review; Decisions; General consideration and Rules governing decisions.
Sec. 12-3-10(2)e.4. NHPD; Regulations and guidelines for any development within the preservation district; Fences.
Sec. 12-3-10(2)e.5. NHPD; Regulations and guidelines for any development within the preservation district; Paint colors.
Sec. 12-3-10(2)e.6. NHPD; Regulations and guidelines for any development within the preservation district; Residential accessory structures.
Sec. 12-3-10(2)h. NHPD; Regulations for new construction and additions to existing structure in the North Hill preservation district.

ATTACHMENTS:

1. Florida Master Site File Form
2. Images
3. Application and Materials

STATE OF FLORIDA
DEPARTMENT OF STATE
Division of Archives, History
and Records Management
Rev. 1/79

FLORIDA MASTER SITE FILE
Site Inventory Form

FDAHRM 802 = =
1009 = =

Site No. ES 437

Site Name Garfield, W.S. House 830 = = Survey Date 8005 820 = =
Address of Site: 815 N.Baylen St. Pensacola, Fl. 32501 905 = =
Instruction for locating W side of N.Baylen between W.Cervantes and W.Strong St. 813 = =
Location: Belmont Tract (subdivision name) 36 (block no.) 19,20,port.14 (lot no.) 868 = =
County: Escambia 808 = =
Owner of Site: Name: Burgett, Robert W. and Evelyn C.
Address: 815 N.Baylen
Pensacola, Fl. 32501 902 = =
Type of Ownership Private 848 = = Recording Date 8005 832 = =
Recorder:
Name & Title: Gantzhorn, Alan; Guedez, Susan
Address: HPPB 818 = =

Condition of Site: Integrity of Site: Original Use Residence 838 = =

Check One		Check One or More		
Excellent	863 = =	Altered	858 = =	Present Use Residence 850 = =
■ Good	863 = =	■ Unaltered	858 = =	Dates: Beginning +1898 844 = =
Fair	863 = =	■ Original Site	858 = =	Culture/Phase American 840 = =
Deteriorated	863 = =	Restored ( ) (Date:)	858 = =	Period 20th Century 845 = =
		Moved ( ) (Date:)	858 = =	

NR Classification Category: District 916 = =

Threats to Site:

Check One or More			
Zoning ( )	878 = =	Transportation ( )	878 = =
Development ( )	878 = =	Fill ( )	878 = =
Deterioration ( )	878 = =	Dredge ( )	878 = =
Borrowing ( )	878 = =		
Other (See Remarks Below)	878 = =		

Areas of Significance: Architecture, History 910 = =

Significance.

This house was built by W.S.Garfield in 1898. He was manager of Pensacola Electric Light Company. His wife, Addie Turner Garfield, purchasedhalf of the property from C.H.Turner in 1896.

SEE SITE FILE STAFF FOR ORIGINAL PHOTO(S) OR MAP(S)

911 = =

ARCHITECT Unknown 872 = =

BUILDER C.H.Turner 874 = =

STYLE AND/OR PERIOD Queen Anne 964 = =

PLAN TYPE Irregular 966 = =

EXTERIOR FABRIC(S) Wood: novelty siding 854 = =

STRUCTURAL SYSTEM(S) Wood frame 856 = =

PORCHES E/ 1 story shed with turned post and spindle and spool balluster, 3 bay, access from E 942 = =

FOUNDATION: Piers: brick, lattice work 942 = =

ROOF TYPE: Gable on hip 942 = =

SECONDARY ROOF STRUCTURE(S): 942 = =

CHIMNEY LOCATION: Center ridge; E lat slope; N slope 942 = =

WINDOW TYPE: DHS 942 = =

CHIMNEY: brick 882 = =

ROOF SURFACING: Composition shingle: butt 882 = =

ORNAMENT EXTERIOR: verge boards; brackets; gingerbread trim 882 = =

NO. OF CHIMNEYS 3 952 = = NO. OF STORIES 1½ 950 = =

NO. OF DORMERS 1 954 = =

Map Reference (incl. scale & date) USGS 7.5 min Pensacola 1970
North Hill, Gordon Richmond, 1974 809 = =

Latitude and Longitude:
° ' " ° ' " 800 = =

Site Size (Approx. Acreage of Property): LT 1 833 = =

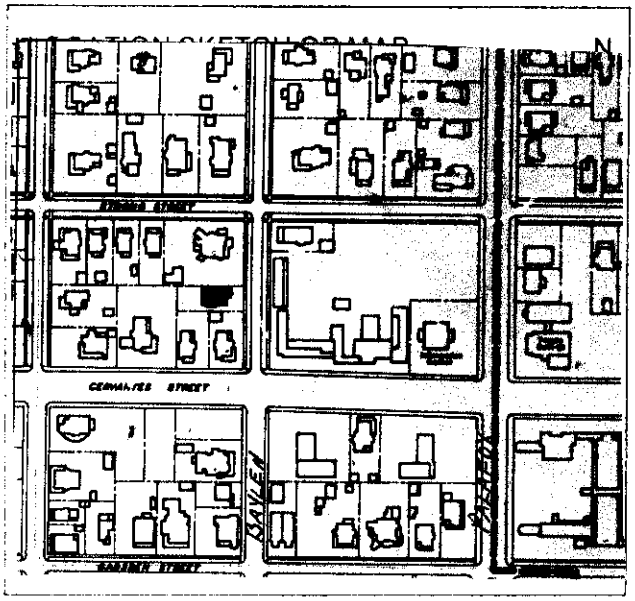

Township	Range	Section
2S	30W	19

812 = =

UTM Coordinates:

890 = =

Zone Easting Northing

Photographic Records Numbers HPPB P80.20 Fr.20 860 = =
NH 5-18,19

Contact Print


Radio Tower
Pensacola High Sch
McMillan Sch
Bibbs Sch
JORDAN
Pensacola Christian Sch
Playground
AVERY
St Anthonys Sch
Sacred Hea Sch
Cobb Center
Park
Radio Tower
Baptist Hospital
MORENO
REUS
LEE
Yonge Sch
LLOYD
BRAINERD
Dixon Sch
PENSACOLA
SOTO
Park
CERVANTES
Beggs Vocational Sch
Water Tank
4 LANE
St Michaels Sch
JACKSON
Gibson Sch
Park
Radio Tower
YMCA
WRIGHT
St Johns Cem
Bus Depot
COYLE
Fire Sta
Library
Armory
St Michae Cem
Legion Field
Blount Middle Sch
Berean Sch
Police Sta
GARDEN
St Stephens Sch
ROMANA
Playground
Hallmark Sch
St Josephs Sch
Courthouse
Seville Squ
City Hall
Museum
GOVERNMENT
Sewage Disposal
MAIN
BURLINGTON NORTHERN
BARRANCAS
Radio Tower
Pensacola Port Authority
Municipal Auditorium
Chico
Sanders Beach
INNER HARBOR
CHANNEL
EAST

ES00437



HISTORICAL STRUCTURE FORM
FLORIDA SITE FILE
Version 2.0 7/92

__ Original
x Update

Site #8 ES00437
Recorder #
Field Date 5 / 3 / 95
Form Date 6 /26 / 95

SITE NAMES (addr. if none) W S GARFIELD HOUSE [MULT. LIST. #8]
SURVEY NORTH HILL [SURVEY # 4758]
NATIONAL REGISTER CATEGORY __building __structure X district __site __object

LOCATION & IDENTIFICATION

ADDRESS (Include N,S,E,W; st., ave., etc.) 815 N BAYLEN ST
CROSS STREETS nearest/between ON W SIDE OF N BAYLEN BTW W CERVANTES AND E STRONG
NEAREST CITY/TOWN PENSACOLA IN CURRENT CITY LIMITS X yes no
COUNTY ESCAMBIA TAX PARCEL # 9010-019-036
SUBDIVISION NAME NORTH HILL BLOCK 36 LOT NO. 19, 20, port 14
OWNERSHIP X private-profit __priv-nonprofit __priv-indiv __priv-unspecified __city __county __state __federal __unknown
NAME OF PUBLIC TRACT (e.g., park) BELMONT TRACT
ROUTE TO

MAPPING

USGS 7.5' MAP NAME 30087-D2-TF-024 1987
TOWNSHIP 2S RANGE 30W SECT. 19 1/4 1/4-1/4 IRREG. SECT.? y n
[UTM: ZONE 16 17 EASTING 0 NORTHING 0]
PLAT OR OTHER MAP (Map's name, location)

DESCRIPTION

STYLE QUEE EXTERIOR PLAN IRRE NO. STORIES 1.5
STRUCTURAL SYSTEMS WF
FOUNDATION: Types PIER Materials BRIC
EXTERIOR FABRICS WOOD
ROOF: Types GAHP Materials SHCO
Secondary strucs. (dormers etc.)
CHIMNEY : No. 3 Materials BRIC LOCATIONS CENTER RIDGE, E LAT SLOPE, SLOPE
WINDOWS (types, materials, and placements)
DHS, 6/6, wood

MAIN ENTRANCE (stylistic details)
PORCHES: #open 1 #closed #incised Locations 1 STORY SHED PORCH W/ 3 BAYS
Porch roof types ACCESS FROM EAST
EXTERIOR ORNAMENT

INTERIOR PLAN CONDITION: X excellent __good __fair __deteriorated __ruinous
SURROUNDINGS (N-None, S-Some, M-Most, A-All or nearly all) S commercial __residential __institutional __rural
ANCILLARY FEATURES (No., type of outbuildings; major landscape features)
RUBBLE STONE RETAINING WALL

ARCHAEOLOGICAL REMAINS AT SITE Archaeological form completed? _ y _ n (No-explain; yes-attach!)
Artifacts or other remains
NARRATIVE (E.g. description of interior, landscape, architecture, etc; please limit to 3 lines and attach full statement on separate sheet)

HISTORICAL STRUCTURE FORM

Site #8_____

HISTORY

CONSTRUCTION DATE 1898 CIRCA x yes __no
ARCHITECT: (last name first) _____
BUILDER: (last name first) C H TURNER
MOVES __yes x no Dates _____ Orig.addr._____
ALTERATIONS __yes __no Dates _____ Nature _____
ADDITIONS __yes __no Dates _____ Nature _____
ORIGINAL USES (give dates) RESIDENCE
INTERMEDIATE USES (give dates) RESIDENCE
PRESENT USES (give dates) COMMERCIAL
OWNERSHIP HISTORY (especially original owner) W A GARFIELD (ORIGINAL), CHARLES H. AND WILLIAM R JR TURNER (CURRENT)

SURVEYOR'S EVALUATION OF SITE

Potentially elig. for local designation?	_yes	_no	_insuff. info	Local Designation Category
Individually elig. for Nat. Register?	_yes	_no	_insuff. info	_____
Potential contributor to NR district?	_yes	_no	_insuff. info	_____

HISTORICAL ASSOCIATIONS (ethnic heritage, etc.)_____

EXPLANATION OF EVALUATION (required; limit to three lines; attach full statement on separate sheet)

CROSS-REFERENCES

BIBLIOGRAPHIC REFERENCES (Author, date, title, publication information. If unpublished, give FSF Manuscript Number, or location where available) _____

PHOTOGRAPHS (REQUIRED) B&W print(s) at least 3 x 5, at least one main facade. Label the back of the print with the FSF site number (site name if not available), direction and date of photograph: use pencil. Attach to back of the second to last page with a plastic or coated clip. Location of negatives/neg. nos. R10, F29-30

RECORDER

NAME (last first)/ADDR/PHONE/AFFILIATION HPPB

FOR DETAILED INSTRUCTIONS: *Guide to the 1992 Historic Structure Form of the Florida Site File.*

DHR USE ONLY	OFFICIAL EVALUATIONS	DHR USE ONLY
NR DATE / /	KEEPER-NR ELIGIBILITY*: y n pe u	Date / /
DELIST DATE / /	SHPO-NR ELIGIBILITY*: y n pe u	Date / /
	LOCAL DESIGNATION*:	Date / /
	Local office	

* y=Yes; n=No; pe=Potentially Eligible; u=Insufficient Information

REQUIRED:
(1) USGS MAP WITH STRUCTURE PINPOINTED
(2) LARGE SCALE STREET OR PLAT MAP
(3) PHOTO OF MAIN FACADE, PREFER B&W, AT LEAST 3X5

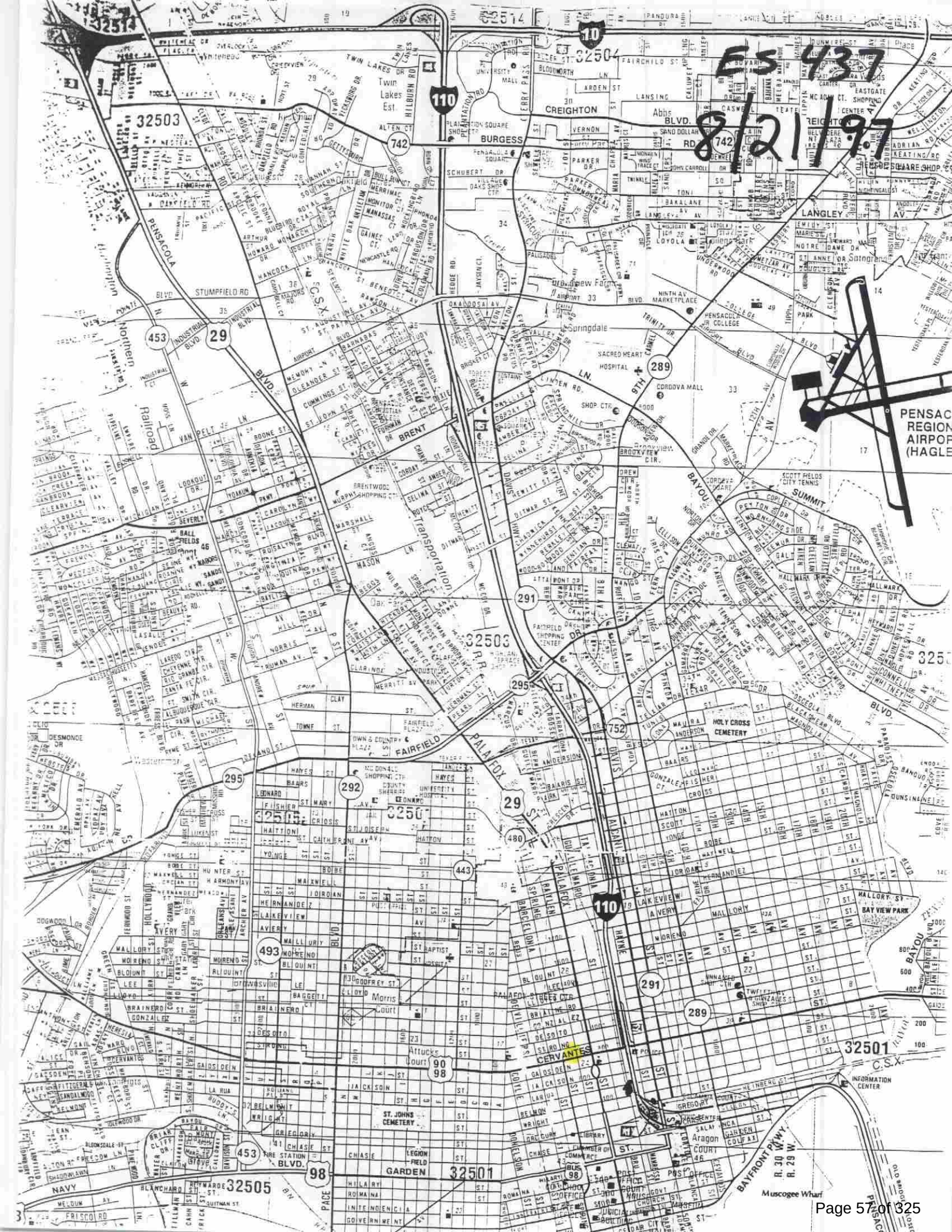
ES 437
8/21/97
PENSACOLA REGION AIRPORT (HAGLE
CREIGHTON
BURGESS
LANGLEY
BRENT
FAIRFIELD
CERVANTES
GARDEN
SUMMIT
BAYOU
HOLY CROSS CEMETERY
ST. JOHNS CEMETERY
BAY VIEW PARK
INFORMATION CENTER
Muscogee Wharf
32503
32504
32505
32501
32514
Twin Lakes Est.
Northern Railroad
Transportation
PENSACOLA
PALAFOX
BAYFRONT PKWY.
R. 30 W.
R. 29 W.




PARK
HERE

815 N. Baylen Street

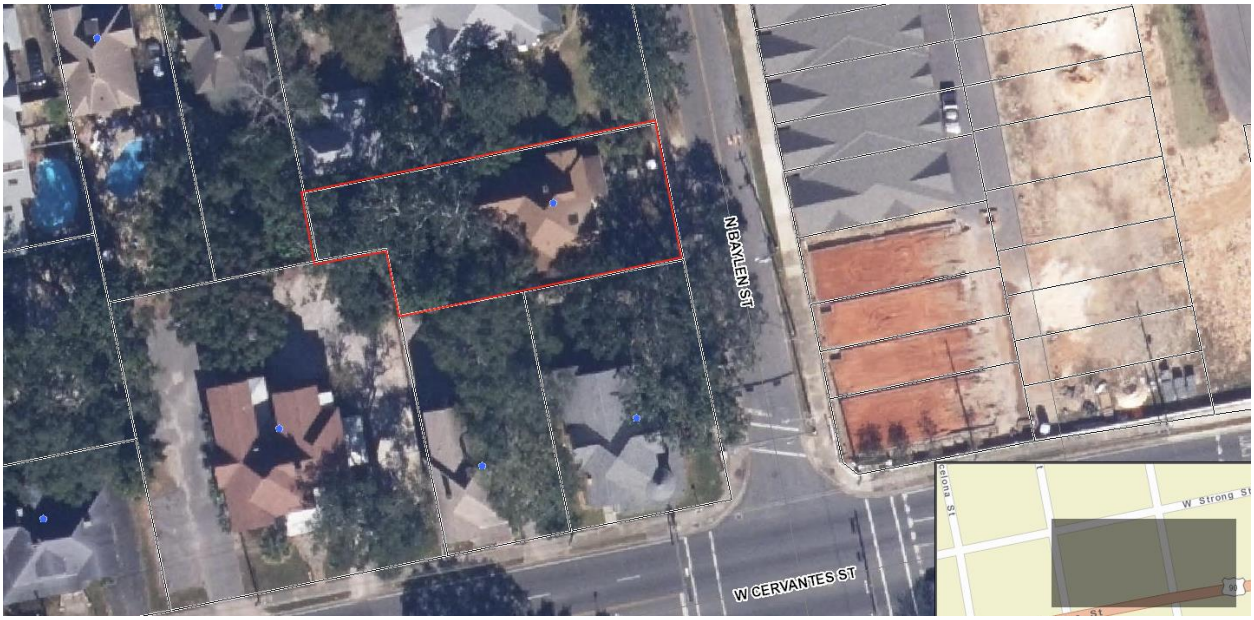



City of Pensacola
America's First Settlement
And Most Historic City

Architectural Review Board Application
Full Board Review

Application Date: 02-29-2024

***Project Address*:** **815 N Baylen St, Pensacola, FL 32501**

Applicant: Scott Sallis

Applicant's Address: 503 E Government St, Pensacola, FL 32502

Email: *scott@dalsal.com* Phone: (850)470-6399

Property Owner: Lisa & Tommi Lyter
(If different from Applicant)

District: ☐ ***PHD*** ☑ ***NHPD*** ☐ ***OEHPD*** ☐ ***PHBD*** ☐ ***GCD***

Application is hereby made for the project as described herein:

☑ Residential Homestead – $50.00 hearing fee

☐ Commercial/Other Residential – $250.00 hearing fee

** An application shall be scheduled to be heard once all required materials have been submitted and it is deemed complete by the Secretary to the Board. You will need to include eight (8) copies of the required information. Please see pages 3 – 4 of this application for further instruction and information.*

Project specifics/description:
PLEASE SPECIFY IF CONCEPTUAL DISCUSSION ITEM, CONCEPTUAL REVIEW, OR FINAL REVIEW.

A new single story, raised floor, wood framed accessory structure will be built in the rear yard of the existing residence.

I, the undersigned applicant, understand that payment of these fees does not entitle me to approval and that no refund of these fees will be made. I have reviewed the applicable zoning requirements and understand that I must be present on the date of the Architectural Review Board meeting.

J. Scott Sallis
Applicant Signature

02-29-24
Date

Planning Services
222 W. Main Street * Pensacola, Florida 32502
(850) 435-1670
Mail to: P.O. Box 12910 * Pensacola, Florida 32521

dalrymple | sallis
architecture

213 S. Baylen St.
Pensacola, FL 32503

V 850.470.6399
F 850.470.6397
www.dalsal.com

Date: Thursday, February 29, 2024

Project: **Lyter Accessory Structure**
815 N. Baylen St.

Recipient: Architectural Review Board – City of Pensacola

EXISTING SITE CONDITIONS



Project Location

dalrymple | sallis
architecture

213 S. Baylen St.
Pensacola, FL 32503

V 850.470.6399
F 850.470.6397
www.dalsal.com

EXISTING PHOTOGRAPHS



Existing View of Backyard Site



Exterior Rear View of Existing Residence



Exterior Rear View of Existing Residence from Backyard Site

dalrymple | sallis
architecture

213 S. Baylen St.
Pensacola, FL 32503

V 850.470.6399
F 850.470.6397
www.dalsal.com

EXTERIOR COLOR SCHEDULE

Recipient: **Architectural Review Board – City of Pensacola**

ARCHITECTURAL ELEMENT	MANUFACTURER	COLOR
Wood Siding	Sherwin Williams	"Rookwood Dark Green"
Wood Trim	Sherwin Williams	"Loggia"
Architectural Grade Running Trim	Sherwin Williams	"Loggia"
Column/Beams	Sherwin Williams	"Loggia"
Ceilings	Sherwin Williams	"Loggia"
Fascia	Sherwin Williams	"Loggia"
Front Porch	Sherwin Williams	"Loggia"
Entry Door	-	To Match Existing Residence
Window/Door Headers	Sherwin Williams	"Loggia"
Roofing	Owens Corning	Driftwood Dimensional Shingles
Covered Deck Roofing	Metal Sales	Ash Grey
Lighting	TBD	Black or Dark Bronze Metal

dalrymple | sallis
architecture

213 S. Baylen St.
Pensacola, FL 32503

V 850.470.6399
F 850.470.6397
www.dalsal.com

PAINT COLORS

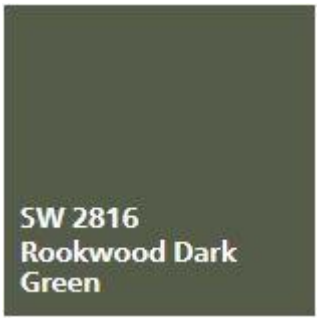

Wood Siding
Sherwin Williams "Rookwood Dark Green"



Wood Accent
Sherwin Williams "Loggia"

ROOFING



Standing Seam:
Metal Sales
Standing Seam Metal "Ash Grey"



Asphalt Shingle:
Owens Corning
"Driftwood"

OTHER MATERIALS

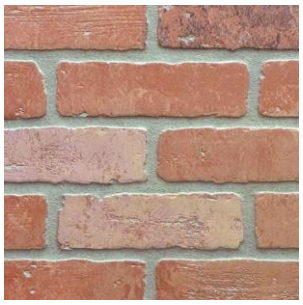

Brick
Red Brick Pavers & Piers
Match Existing Residence



Infill Siding
1 x 4 in. Composite Siding
Sherwin Williams "Rookwood Dark Green"

dalrymple | sallis
architecture

213 S. Baylen St.
Pensacola, FL 32503

V 850.470.6399
F 850.470.6397
www.dalsal.com

WINDOWS – DIVIDED LITES TO MATCH EXISTING RESIDENCE



By: PELLA

Aluminum Clad Wood
Traditional Cross Grilles
Dark Bronze
Match Existing Residence



Fixed Stained Glass Window

Clad Wood
Painted
Match Existing Residence

ENTRY DOOR – HINGE DOOR WITH FLAT GRILLES



By: NEUMA

Fiberglass Exterior Door
Painted

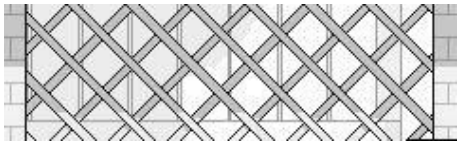



Lattice

Sherwin Williams "Loggia"
Match Existing Residence

dalrymple | sallis
architecture

213 S. Baylen St.
Pensacola, FL 32503

V 850.470.6399
F 850.470.6397
www.dalsal.com

EXTERIOR LIGHTING



Exterior Pendant

Finish: Black or Dark Bronze Metal

dalrymple | sallis
architecture

213 S. Baylen St.
Pensacola, FL 32503

V 850.470.6399
F 850.470.6397
www.dalsal.com

PLANTING

BOXWOOD



HERBS IN PLANTERS



Basil



Rosemary



Mint

GARDENIA BUSH



Gardenia

dalrymple | sallis
architecture

213 S. Baylen St.
Pensacola, FL 32503

V 850.470.6399
F 850.470.6397
www.dalsal.com

SEASONAL FLOWERS



Camellias



Hydrangeas

PLANTER ROW



Japanese Yew



Arborvitae

SITE ELEMENTS



Existing Wood Privacy Fence

dalrymple | sallis
architecture

213 S. Baylen St.
Pensacola, FL 32503

V 850.470.6399
F 850.470.6397
www.dalsal.com

RENDERINGS





Pella® Reserve™
Traditional Wood & Clad/Wood

Exquisitely designed windows and doors with unparalleled historical detailing.

Double-Hung Interior



Double-Hung Exterior



- **Historical details**
  Our most historically authentic line of wood windows and patio doors. Featuring through-stile construction, deliberate proportions and intricate profiles. Pella Reserve – Traditional products are the ideal choice for historical renovations and traditional building projects.
- **Authentic hardware**
  Complement your project with historically authentic spoon-lock window hardware. Our Antiek casement window hardware is inspired by period furniture to deliver authentic traditional style.
- **Architectural interest**
  Pella's Integral Light Technology® grille helps capture the look of true-divided-light without sacrificing energy performance. Further your aesthetic with the putty profile, recreated with historically accurate angles to provide meaningful depth and a realistic shadow. Pella Reserve products offer the industry's deepest sash dimension.
- **Virtually unlimited customization**
  If you can dream it, we can build it with our most customizable product line. From extra tall to extra wide, Pella can craft unique windows that complement your aesthetic. Custom sizes, grille patterns and designs, finishes, wood types and glass options are available.
- **Tailor-made solutions**
  From preliminary drawings to installation, Pella's expert team of architects, engineers, drafters and consultants can work to deliver custom window and door solutions for your project. Partner with Pella to achieve your unique vision without concessions.
- **Intentional innovation**
  The award-winning Integrated Rolscreen® retractable screen preserves aesthetics and the view. It is a double- and single-hung screen that appears when you open the window and rolls away, out of sight, when you close it.
- **Durable interiors and extruded aluminum exteriors**
  To help save you time on the jobsite, interior finish options are available in a variety of paints and stains, or primed and ready-to-paint. To complement your exterior aesthetic, choose from our carefully curated color palette or define your own custom color for your project.
- **ENERGY STAR® certified**[1]
  Pella wood products offer energy-efficient options that will meet or exceed ENERGY STAR guidelines in all 50 states.
- **Testing beyond requirements**
  All wood products and testing are not created equal. Pella raises the bar on industry standard testing and beyond to deliver long-lasting products and reduced callbacks. Every Pella wood window and door passes 5, on average, quality checks before it arrives on the jobsite.
- **Best limited lifetime warranty**[2]
  Pella Reserve products are covered by the best limited lifetime warranty in the business for wood windows and patio doors.[2]

Available in these window and patio door styles:



Special shape windows also available.

[1,2] See back cover for disclosures.

Product Specifications

Window & Patio Door Styles	Min. Width	Min. Height	Max.Width	Max. Height	Performance Class & Grade	Performance Values			Frame / Install
						U-Factor	SHGC	STC	
Awning	13-¾"	13-¾"	59"	59"	LC30 – CW50	0.25-0.29	0.18-0.47	27-35	Fold-out Fin, Block Frame, EnduraClad Exterior Trim / Brickmould
Casement	13-¾"	13-¾"	47"	108"	R35-CW50	0.25-0.29	0.18-0.47	27-34	Fold-out Fin, Block Frame, EnduraClad Exterior Trim / Brickmould
Fixed Casement	10"	10"	144"	144"	R35-CW50	0.25-0.29	0.18-0.47	27-35	Fold-out Fin, Block Frame, EnduraClad Exterior Trim / Brickmould
Double-Hung	14"	24-3/8"	48"	96"	CW30-CW50	0.25-0.30	0.19-0.53	28-35	Fold-out Fin, Block Frame, EnduraClad Exterior Trim / Brickmould
Precision Fit Double-Hung	13-½"	23-¾"	48"	84"	CW40-CW50	0.25-0.31	0.19-0.53	26-30	Pocket Replacement
Monumental Hung	13-¾"	24"	72"	144"	LC25-CW50	0.25-0.30	0.17-0.47	29-34	Fold-out Fin, Block Frame, EnduraClad Exterior Trim / Brickmould
In-Swing Hinged Patio Door (Single)	18"	36"	48"	119-½"	LC40-LC55	0.25-0.29	0.14-0.40	31-35	
In-Swing Hinged Patio Door (Double)	36"	36"	96"	119-½"	LC40-LC55	0.25-0.29	0.14-0.40	31-35	
Out-Swing Hinged Patio Door (Single)	18"	36"	48"	119-½"	R50-LC70	0.25-0.30	0.14-0.39	30-36	
Out-Swing Hinged Patio Door (Double)	36"	36"	96"	119-½"	R50-LC70	0.25-0.30	0.14-0.39	30-36	
Sliding Patio Door (O)	30-¾"	74"	60-¾"	119-½"	LC40-LC70	0.29-0.32	0.15-0.42	—	
Sliding Patio Door (OX, XO)	59-¼"	74"	119-½"	119-½"	LC35-LC65	0.29-0.32	0.15-0.42	29-35	
Sliding Patio Door (OXO)	90"	74"	180"	119-½"	LC30-LC45	0.29-0.32	0.15-0.42	—	
Sliding Patio Door (OXXO)	116-1/8"	74"	236-1/8"	119-½"	LC25-LC40	0.29-0.32	0.15-0.42	—	
Multi-Slide Patio Door	40-¼"	50-½"	701-5/8"	119-½"	R15-LC25[3]	0.30 – 0.36	0.15 – 0.46	31	For more info visit PellaADM.com
Bifold Patio Door	31-¾"	55-½"	312"	119-½"	R15-LC25[3]	0.26-0.44	0.13-0.45	—	

Window sizes available in 1/8" increments
Special sizes available. For more information regarding performance, visit pella.com/performance. For more information regarding frame and installation types, visit PellaADM.com.

Grilles

Integral Light Technology®

Choose the look of true divided light without sacrificing energy performance.



Putty Glaze Exterior with Ogee Interior[4] 7/8", 1-1/4" or 2"



Putty Glaze Exterior with Ogee Interior[4] 7/8", 1-1/4" or 2"



Ogee Exterior with Ogee Interior[4] 7/8", 1-1/4" or 2"

Cross Sections

Cross Sections

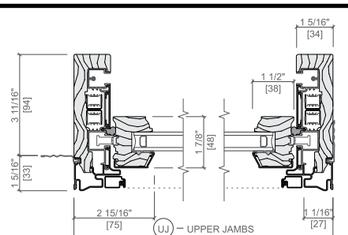

Optional Fold-out Installation Fin

The double-hung cross sections provide visual reference to the historic putty exterior profile and traditional, beveled Ogee interior that add architectural interest to your project.

[3,4] See back cover for disclosures.

Window Hardware

Classic Collection

Get a timeless look with authentic styles in classic finishes.



Fold-away Crank
Antiek



Spoon-Style Lock

Finishes:



Champagne

White



Brown



Matte Black



Oil-Rubbed Bronze



Satin Nickel



Satin Brass

Rustic Collection

Create a distinct and charming look with distressed finishes.



Fold-away Crank
Antiek



Spoon-Style Lock

Finishes:

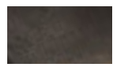

Distressed Bronze



Distressed Nickel

Essential Collection

Select from popular designs and finishes to suit every style.



Fold-away Crank



Cam-Action Lock

Finishes:



Champagne

White



Brown



Matte Black



Oil-Rubbed Bronze



Satin Nickel



Satin Brass

Patio Door Hardware

Classic Collection

BALDWIN

Choose timeless pieces, created in collaboration with Baldwin® Hardware, for a look that will never go out of style.



Hinged & Bifold Patio Door Handle
Virago



Sliding & Multi-Slide Patio Door Handle
Ambrose



Multi-Slide Patio Door Handle[5,6]

Finishes:



Matte Black



Oil-Rubbed Bronze



Satin Nickel



Satin Brass

Essential Collection

Elevate your style and transform a home with elegant selections.



Hinged & Bifold Patio Door Handle
Standard



Sliding Patio Door Handle
Standard



Multi-Slide Patio Door Handle[5,6]

Finishes:



Champagne

White



Brown



Matte Black

Oil-Rubbed Bronze

Satin Nickel

Satin Brass

Additional hardware collections available. Visit PellaADM.com for more information.

[5,6] See back cover for disclosures.

Pella® Reserve™ Features & Options

Colors & Finishes

Wood Types

C T

Choose the wood species that best complements your project's interior.

Custom solutions:



Pine | **Douglas Fir** | **Mahogany** | **White Oak** | **Red Oak** | **Cherry** | **Maple**

Prefinished Pine Interior Colors

C T

When you select pine, we can prefinish in your choice of a variety of paint and stain colors. Unfinished or primed and ready-to-paint are also available.



White | **Bright White** | **Linen White** | **Natural Stain** | **Golden Oak Stain** | **Early American Stain** | **Provincial Stain** | **Dark Mahogany Stain**

Red Mahogany Stain | **Espresso Stain** | **Charcoal Stain** | **Black Stain**

Extruded Aluminum-Clad Exterior Colors

C T

Our low-maintenance EnduraClad® exterior finish resists chalking and fading. Take durability further with EnduraClad Plus protective finish, which meets the industry's highest exterior coating standard to defend against chalking and fading.[1] Custom colors are also available.



Black | **White** | **Brown** | **Fossil**

Iron Ore | **Portobello** | **Putty** | **Almond** | **Classic White** | **Brick Red** | **Hartford Green** | **Pearl Gray**

Soft Linen | **Satin Steel** | **Matte Gray** | **Wolf Gray** | **Spice Red** | **Sage** | **Frost Blue** | **Blue Ash**

Glass

InsulShield® Low-E Glass[2]

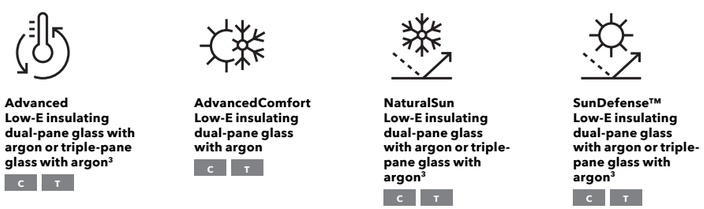

Advanced Low-E insulating dual-pane glass with argon or triple-pane glass with argon[3]

C T

AdvancedComfort Low-E insulating dual-pane glass with argon

C T

NaturalSun Low-E insulating dual-pane glass with argon or triple-pane glass with argon[3]

C T

SunDefense™ Low-E insulating dual-pane glass with argon or triple-pane glass with argon[3]

C T

Additional Glass Options

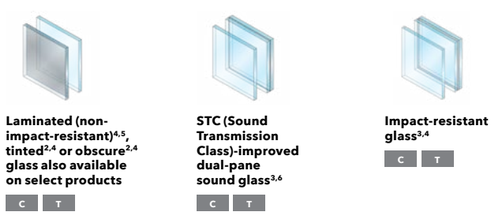

Laminated (non-impact-resistant)[4,5], tinted[2,4] or obscure[2,4] glass also available on select products

C T

STC (Sound Transmission Class)-improved dual-pane sound glass[3,6]

C T

Impact-resistant glass[3,4]

C T

[1] The highest exterior coating standard for painted aluminum exteriors is the AAMA 2605 standard. EnduraClad Plus protective finish is not available with all colors. See your local Pella sales representative for availability.

[2] Optional high-altitude InsulShield Low-E glass is available with or without argon on select products.

[3] Available on select products only. See your local Pella sales representative for availability.

[4] Available with Low-E insulating glass with argon on select products.

[5] For best performance, the laminated glass may be in the interior or exterior pane of the insulating glass, depending on the product.

[6] Sound control glass consists of dissimilar glass thickness (3mm/5mm).

C Pella® Reserve™ - Contemporary
T Pella Reserve - Traditional

Grilles

Grille Types

Choose the look of true divided light with Integral Light Technology® or make cleaning easier by selecting grilles-between-the-glass.



Ogee Integral Light Technology® 7/8", 1-1/4" or 2"[6]

T

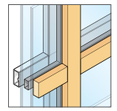

Square Integral Light Technology® 5/8", 7/8", 1-1/4" or 2"[6]

C



Aluminum Grilles-Between-the-Glass 3/4"

C T

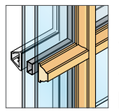

Putty Glaze Integral Light Technology® with Ogee Interior[1] 5/8", 7/8", 1-1/4" or 2"

T

Grilles-Between-the-Glass Interior Colors:[2]



Black | **White** | **Brown** | **Fossil** | **Ivory** | **Harvest** | **Cordovan**

Grille Patterns

In addition to the patterns shown here, custom grille patterns are available.

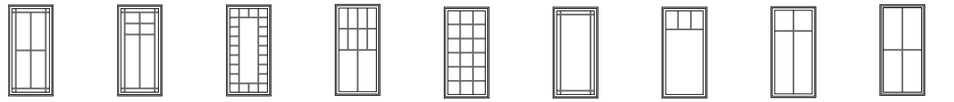

12-Lite Prairie

T

14-Lite Prairie

T

Victorian

T

New England

T

Traditional

C T

9-Lite Prairie

C T

Top Row

C T

Cross

C T

Custom

C T



Diamond

T

Simulated French

T

Screens[3]

Rolscreen® & Integrated Rolscreen

C T

Rolscreen soft-closing retractable screens roll out of sight when not in use on Pella Reserve – Traditional casement windows and sliding patio doors and on Pella Reserve – Contemporary sliding patio doors. The Integrated Rolscreen is a fully concealed Rolscreen that moves seamlessly with the sash – appearing when you open a Pella Reserve – Traditional single- or double-hung window and rolling completely away when you close it.

Flat

C T

InView™ screens let in 14% more light and are 8% more open for improved airflow.[4]

Added Peace of Mind

Integrated Security Sensors

C T

Optional integrated wireless security sensors maintain aesthetics, streamline security installation and ensure no warranty loss is caused by post-installation drilling. Sensors can be monitored via the free Pella® Insynctive® App and are compatible with major security panel systems.[5] For more information, go to connectpella.com.

[1] Color-matched to your product's interior and exterior color.

[2] Appearance of exterior grille color may vary depending on the Low-E insulating glass selection.

[3] Warning: Use caution when children or pets are around open windows and doors. Screens are not designed to retain children or pets.

[4] Improved airflow is based on calculated screen cloth openness. Screen cloth transmittance was measured using an integrated sphere spectrophotometer.

[5] Requires the Insynctive App on a smart device, an Insynctive Bridge and a wireless home router with internet connection

Colors

Wood Types

Choose the wood species that best complements your project's interior.

Custom solutions:

Pine


Douglas Fir


Mahogany


White Oak

Red Oak


Cherry

Maple

Prefinished Pine Interior Colors

Custom interior finishes, unfinished or primed and ready-to-paint are also available.

White

Bright White

Linen White


Natural Stain


Golden Oak Stain


Early American Stain


Provincial Stain


Dark Mahogany Stain


Red Mahogany Stain


Espresso Stain


Charcoal Stain


Black Stain

Extruded Aluminum-Clad Exterior Colors

Our low-maintenance EnduraClad® exterior finish resists fading. Take durability one step further with EnduraClad Plus which also resists chalking and corrosion.[7]


Black

White


Brown


Fossil



Custom colors are also available.


Iron Ore


Portobello


Putty

Almond

Classic White


Brick Red


Hartford Green

Pearl Gray

Soft Linen


Satin Steel


Matte Gray

Wolf Gray


Spice Red


Sage


Frost Blue


Blue Ash

Added Peace of Mind

Integrated Security Sensors

Integrated wireless security sensors maintain aesthetics, streamline security installation and ensure no warranty loss is caused by post-installation drilling. Sensors can be monitored via the free Pella® Insynctive® App and are compatible with major security panel systems.[8] For more information, go to connectpella.com.

The Best Limited Lifetime Warranty in the Industry

We know your reputation matters and you stake your reputation on quality, dependable products. That's why we have the best limited lifetime warranty in the industry for wood windows and patio doors.[2]

[1] Some Pella products may not meet ENERGY STAR® guidelines in Canada. For more information, contact your local Pella sales representative or go to energystar.gc.ca.
[2] Based on comparing written limited warranties of leading national wood window and wood patio door brands. See written limited warranty for details, including exceptions and limitations, at pella.com/warranty or contact Pella Customer Service.
[3] Ratings are contingent on product configurations.
[4] Color-matched to your product's interior and exterior color.
[5] Flush multi-slide handle is a Pella exclusive design.
[6] Flush multi-slide handle is not available in Champagne.
[7] EnduraClad Plus protective finish is not available with all colors. See your local Pella sales representative for availability.
[8] Requires the Insynctive App on a smart device, an Insynctive Bridge and a wireless home router with internet connection.

© 2024 PELLA CORPORATION • 102 MAIN STREET • PELLA, IOWA 50219 • PRTB2B1223 • W372185

LYTER ACCESSORY STRUCTURE

ACCESSORY STRUCTURE FOR LYTER RESIDENCE

815 N BAYLEN ST. PENSACOLA, FL 32501

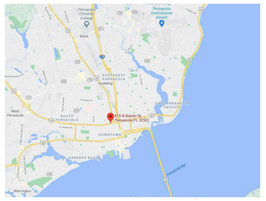

VICINITY MAP

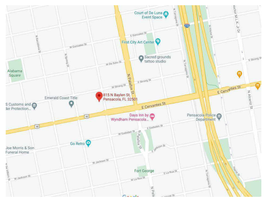

SITE MAP

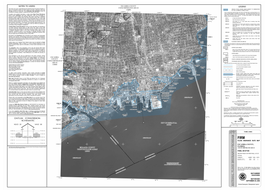

FEMA FLOOD MAP

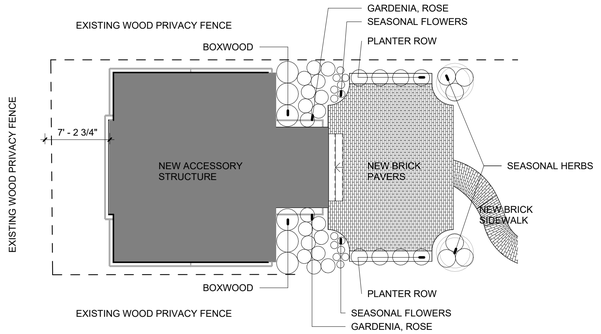

2 **SITE LANDSCAPING PLAN**
1/8" = 1'-0"

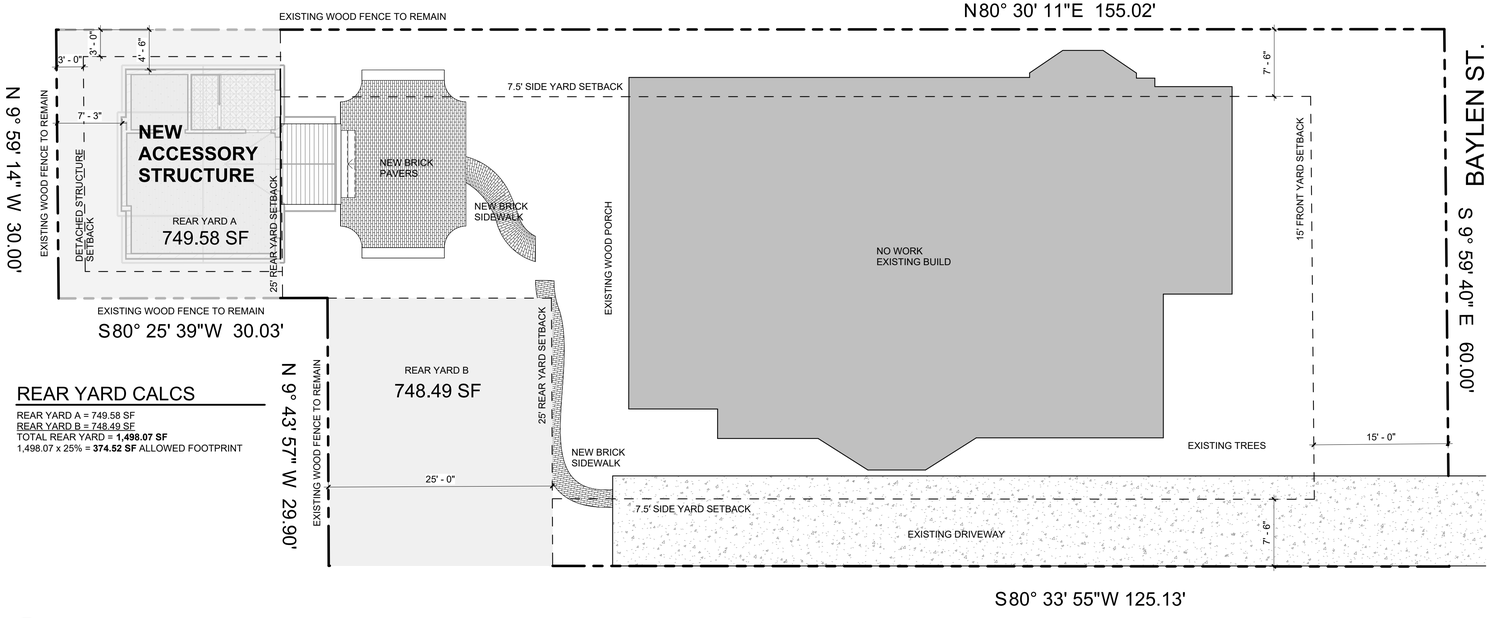

REAR YARD CALCS

REAR YARD A = 749.58 SF
REAR YARD B = 748.49 SF
TOTAL REAR YARD = **1,498.07 SF**
1,498.07 x 25% = **374.52 SF** ALLOWED FOOTPRINT

1 **ARCHITECTURAL SITE PLAN**
1/8" = 1'-0"

BUILDING DATA

APPLICABLE CODES:
2023 FLORIDA BUILDING CODE, RESIDENTIAL
FLORIDA FIRE PREVENTION CODE, 8th EDITION

CONSTRUCTION TYPE:
TYPE VB: UNPROTECTED, UNSPRINKLERED

OCCUPANCY CLASSIFICATION:
ACCESSORY STRUCTURE

ZONED: PR-2

PHYSICAL PROPERTIES:
BUILDING HEIGHT: 18'-7 1/4"

NO. OF STORIES: 1

BUILDING AREA TOTALS

LEVEL	AREA	COMMENTS
GROUND LEVEL		
GROUND LEVEL	371 SF	
TOTAL BUILDING AREA (CONDITIONED)	371 SF	

INDEX OF DRAWINGS

Sheet Number	Sheet Title	Rev. #
General		
G001	TITLE SHEET	
Architectural		
A101	NEW WORK PLANS	
A201	EXTERIOR ELEVATIONS & BUILDING SECTIONS	
A801	3D PERSPECTIVE VIEWS & SCHEDULES	

GENERAL NOTES

1. TO THE BEST OF OUR KNOWLEDGE, THESE DRAWINGS COMPLY WITH THE APPLICABLE REQUIREMENTS OF THE FLORIDA BUILDING CODE, 2023 EDITION
2. CONTRACTOR TO COMPLY WITH REQUIREMENTS OF THE FLORIDA BUILDING CODE, AND ALL OTHER APPLICABLE FEDERAL, STATE AND LOCAL CODES, STANDARDS, REGULATIONS AND LAWS.
3. ALL REFERENCED STANDARDS REFER TO THE EDITION IN FORCE AT THE TIME THESE ARE ISSUED.
4. CONTRACTOR TO REVIEW ALL CONTRACT DOCUMENTS, DIMENSIONS AND SITE CONDITIONS AND COORDINATE WITH FIELD DIMENSIONS AND PROJECT SHOP DRAWINGS PRIOR TO CONSTRUCTION. REPORT ANY DISCREPANCIES IN WRITING TO ARCHITECT. DO NOT CHANGE SIZE OR DIMENSIONS OF STRUCTURAL MEMBERS WITHOUT WRITTEN INSTRUCTIONS FROM THE ARCHITECT OF RECORD.
5. ANY DISCREPANCIES, OMISSIONS OR VARIATIONS NOTED IN THE CONSTRUCTION DOCUMENTS OR DISCOVERED DURING CONSTRUCTION SHALL BE IMMEDIATELY COMMUNICATED IN WRITING TO THE ARCHITECT FOR HIS REVIEW. CONTRACTOR SHALL BE RESPONSIBLE FOR ALL ASSUMPTIONS OF CONSTRUCTION DOCUMENTS NOT VERIFIED IN WRITING BY THE ARCHITECT OF RECORD.
6. PROTECT EXISTING FACILITIES, STRUCTURES AND UTILITY LINES FROM ALL DAMAGE. EACH CONTRACTOR SHALL PROTECT HIS WORK, ADJACENT PROPERTY AND THE PUBLIC. EACH CONTRACTOR IS SOLELY RESPONSIBLE FOR DAMAGE OR INJURY DUE TO HIS ACT OR NEGLECT.
7. THE CONTRACTOR IS SOLELY RESPONSIBLE FOR JOB SAFETY AND CONSTRUCTION PROCEDURES.
8. DO NOT SCALE DRAWINGS; USE DIMENSIONS.
9. DETAILS LABELED "TYPICAL DETAILS" ON THE DRAWINGS APPLY TO ALL SITUATIONS THAT ARE THE SAME OR SIMILAR TO THOSE SPECIFICALLY DETAILED. SUCH DETAILS APPLY WHETHER OR NOT THEY ARE KEYED IN AT EACH LOCATION. QUESTIONS REGARDING APPLICABILITY OF TYPICAL DETAILS SHALL BE RESOLVED BY THE ARCHITECT.
10. PRODUCT SUBSTITUTION SHALL BE MADE SUBJECT TO FULL COMPLIANCE WITH THE CRITERIA NOTED HEREON, ANY SUCH SUBSTITUTION SHALL BE SUBJECT TO PRIOR APPROVAL BY THE DESIGN PROFESSIONAL AND THE LOCAL BUILDING AUTHORITY HAVING JURISDICTION.
11. PRIOR TO COMMENCEMENT OF THE WORK, PROVIDE THE ARCHITECT WITH A PROPOSED SUBMITTAL SCHEDULE. ALLOW, AT MINIMUM, (12) BUSINESS DAYS FOR EACH SUBMITTAL REVIEW. NO EXTENSION OF THE CONTRACT TIME OR INCREASE IN THE CONTRACT SUM WILL BE AUTHORIZED BECAUSE OF FAILURE TO TRANSMIT SUBMITTALS ENOUGH IN ADVANCE OF THE WORK TO PERMIT PROCESSING, INCLUDING RESUBMITTALS.
12. COMPLY WITH 2023 FBC, RESIDENTIAL EDITION R301.2.1.2 FOR RESIDENTIAL WORK OR 2023 FBC 1609.1.2 FOR COMMERCIAL WORK REGARDING OPENING PROTECTION. FOR R-3 OCCUPANCIES ONLY, OPTION TO PROVIDE FLORIDA PRODUCT APPROVED IMPACT RESISTANT GLAZING PRODUCT, OR WIND LOAD APPROVED WINDOWS PROTECTED WITH FLORIDA PRODUCT APPROVED OPENING PROTECTION SYSTEM. IF LATTER OPTION IS USED, PROVIDE (2) COPIES OF MARKED INSTALLATION INSTRUCTIONS FOR ANCHOR SIZE, SPACING, MOUNTING TYPE, ETC.

ELEVATION REFERENCES

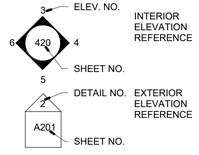

DETAIL REFERENCES

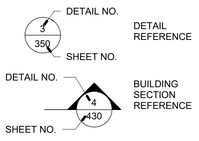

ANNOTATION REFERENCES

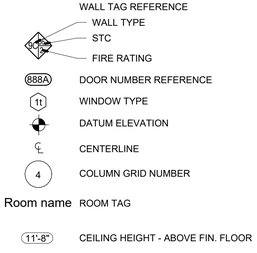

REVISION NUMBER REFERENCE

1 REVISION NO.

dalrymple | sallis architecture
503 E. Government St.
Pensacola, FL 32502
v: 850-470-6399
f: 850-470-6397
www.dalsal.com
AR 0016385

THIS DOCUMENT SHOWS ORIGINAL AND UN-PUBLISHED WORK OF THE ARCHITECT AND MAY NOT BE DUPLICATED IN ANY PART WITHOUT WRITTEN CONSENT OF THE FIRM'S PRINCIPALS

CERTIFICATION

SCHEMATIC DESIGN NOT FOR CONSTRUCTION

LYTER ACCESSORY STRUCTURE

815 N BAYLEN ST. PENSACOLA, FL 32501

DRAWN BY:	CHECKED BY:
KD	JSS

ISSUE DATE: 2-29-2024

REVISIONS:

No.	Desc.	Date

SHEET TITLE: **TITLE SHEET**

SHEET NO: **G001**

PROJECT NO: Project Number

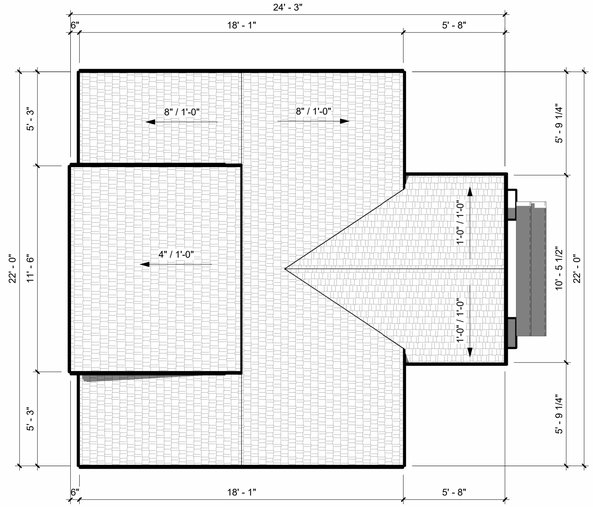

3 ROOF PLAN
1/4" = 1'-0"

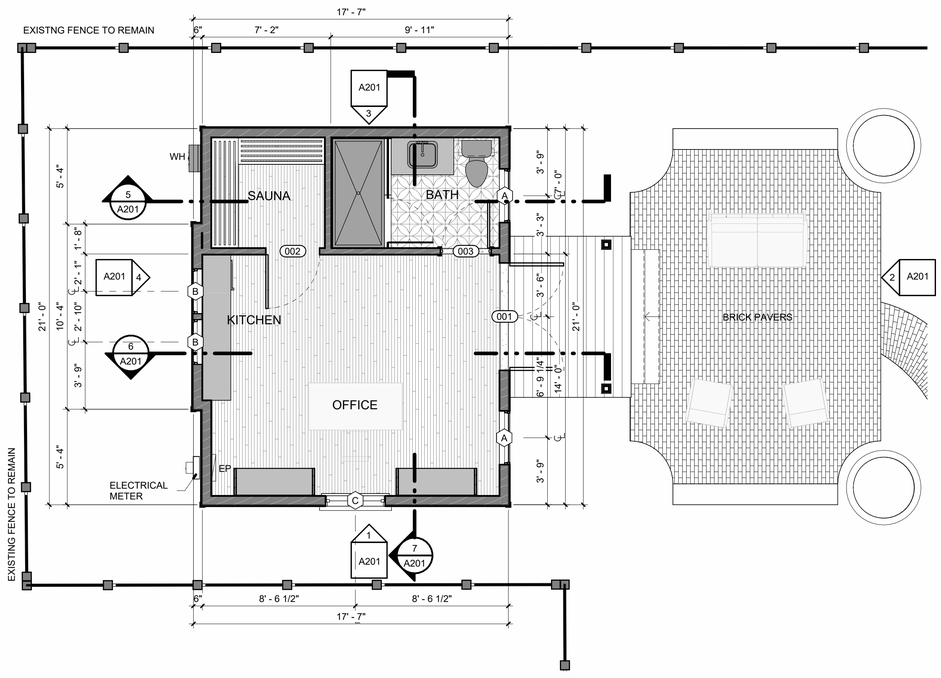

1 FLOOR PLAN
1/4" = 1'-0"

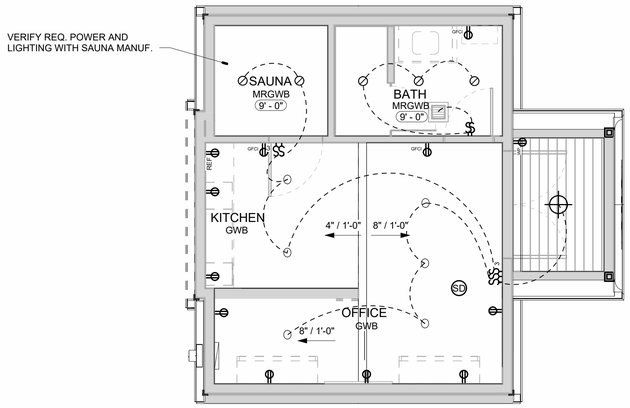

2 REFLECTED CEILING PLAN
1/4" = 1'-0"

LIGHTING LEGEND:

- RECESSED LED LIGHT FIXTURE; CENTERED WITHIN ROOM U.N.O.
- PENDANT LIGHT FIXTURE; CENTERED WITHIN ROOM U.N.O. CONFIRM SELECTION W/ OWNER
- EXHAUST FAN

ELECTRICAL LEGEND:

- DUPLEX OUTLET
- WEATHER PROOF
- GROUND FAULT CIRCUIT INTERRUPTER
- DATA
- CABLE TV
- SWITCH
- 3-WAY SWITCH
- (SD) COMBINED SMOKE & CARBON MONOXIDE DETECTOR LISTED OR LABELED BY A NATIONAL RECOGNIZED TESTING LABORATORY. HARDWIRED TO BUILDING ELECTRICAL SYSTEM. INSTALL WITHIN 10'-0" OF ALL SLEEPING AREAS AND ENSURE EACH DEVICE HAS BATTERY BACK-UP.

TYPICAL MOUNTING HEIGHTS:

WALL SWITCHES	48"
RECEPTACLE OUTLETS (general)	18"
RECEPTACLE OUTLETS (kitchen, utility room, workbenches, etc.)	42", or 6" above countertop
BELLS, BUZZERS, CHIMES	96" when possible, or 6" below ceiling
TELEPHONE OUTLETS	18"
THERMOSTATS	48"
BED LIGHTS	72"
PUSH BUTTONS	48"

NOTE: COORDINATE OUTLET HEIGHT FOR APPLIANCES W/ ARCHITECTURAL FLOOR PLANS AND INTERIOR ELEVATIONS.

ELECTRICAL NOTES:

1. CONFIRM ALL FIXTURES AND LOCATIONS WITH OWNER PRIOR TO INSTALLATION.

CONDUITS AND CONNECTIONS

1. FINAL CONDUIT CONNECTIONS TO HEAT PUMPS, AIR HANDLERS, EXHAUST FANS, AND WATER HEATERS SHALL BE FLEXIBLE METAL (LIQUID TIGHT IN FLAMMABLE, OUTSIDE AND OTHER DAMP AND WET LOCATIONS).
2. CONDUITS LEAVING OR ENTERING BUILDING SHALL BE SEALED PER N.E.C. TO PREVENT ENTRANCE OF MOISTURE.
3. CONDUIT ROUTINGS AND DEVICE/EQUIPMENT LOCATIONS SHOWN ARE DIAGRAMMATIC ONLY, CONTRACTOR SHALL FIELD ROUTE AND LOCATE AS REQUIRED.
4. CONDUIT MATERIAL SHALL BE AS FOLLOWS:
   - A. BELOW GRADE: RIGID NON-METALLIC. (POWER ONLY).
   - B. CONCEALED RISER FROM 36" BELOW GRADE: RIGID NON-METALLIC. (POWER ONLY)
   - C. ABOVE GRADE SUBJECT TO PHYSICAL ABUSE: RIGID GALVANIZED STEEL OR INTERMEDIATE.
   - D. ABOVE GRADE NOT SUBJECT TO PHYSICAL ABUSE OR WEATHER: ELECTRICAL METALLIC TUBING.
   - E. INDOORS NOT SUBJECT TO PHYSICAL ABUSE: ROMEX
   - F. ALL INTERCOM, FIRE ALARM, CLOCK AND CCTV CONDUITS INSTALLED BELOW GRADE THAT ARE NOT UNDER THE BUILDING SLAB: INTERMEDIATE OR RIGID METAL. PVC NOT ALLOWED.

CODES & EQUIPMENT

1. ALL WORK SHALL COMPLY WITH LOCAL AND STATE ELEC. CODES, IN ADDITION TO THE NATIONAL ELECTRIC CODE.
2. ELECTRICAL CONTRACTOR SHALL COORDINATE W/ GULF POWER. TO ENSURE THE OWNER HAS A COMPLETE AND OPERABLE SERVICE.
3. ALL ELECTRICAL EQUIPMENT AND DEVICES SHALL BE PROVIDED WITH SUITABLE PHENOLIC NAMEPLATES.
4. THE CONTRACTOR SHALL VERIFY ALL APPLIANCE LOADS PRIOR TO RUNNING THE CIRCUIT. THE MINIMUM CIRCUIT REQUIREMENTS SHALL BE BASED ON THE APPLIANCE NAMEPLATE VALUE OR CODE REQUIREMENTS, WHICHEVER IS MORE STRINGENT.
5. COORDINATE LOCATIONS OF ELECTRICAL EQUIPMENT, DEVICES, OUTLETS, FIXTURES, ETC., WITH ARCHITECTURAL PLANS, ELEVATIONS AND REFLECTED CEILING PLANS PRIOR TO ROUGH-IN WORK.
6. VERIFY ALL DOOR SWINGS WITH ARCHITECTURAL DRAWINGS PRIOR TO ROUGHING IN FOR SWITCHES.
7. WORKING SPACE OF 3 FEET SHALL BE MAINTAINED IN FRONT OF ALL ELECTRICAL PANELS AND DEVICES.

RECEPTACLES & SWITCHES

1. **ALL LOW VOLTAGE WIRING AND BOXES BY INTEGRATED SURROUNDINGS.**
2. WHERE TWO SWITCHES ARE SHOWN, PROVIDE SINGLE POLE COMBINATION DECORATOR LIGHT SWITCH - WHITE
3. ALL DIMENSIONS FOR MOUNTING HEIGHTS OF NEW RECEPTACLES AND SWITCHES ARE TO THE CENTER OF THE BOX.
4. VERIFY FLOOR RECEPTACLE LOCATIONS (IF APPLICABLE) WITH OWNER PRIOR TO ROUGH-IN.
5. RECEPTACLES, SWITCHES AND COVER PLATES SHALL BE DECORATOR STYLE. COLOR SHALL BE WHITE.
6. WALL RECEPTACLES SHALL NOT BE INSTALLED BACK TO BACK.
7. RECEPTACLE SPACING MUST BE PER NEC.
8. ALL BATHROOMS, KITCHEN AND OUTDOOR LOCATIONS TO BE GFCI AS REQUIRED PER NEC.
9. SWITCHED OUTLETS SHALL HAVE ONLY TOP PORTION OF OUTLET SWITCHED.

dalrymple | sallis
architecture
503 E. Government St.
Pensacola, FL 32502
v: 850-470-6399
f: 850-470-6397
www.dalsal.com
AR 0016385

THIS DOCUMENT SHOWS ORIGINAL AND UN-PUBLISHED WORK OF THE ARCHITECT AND MAY NOT BE DUPLICATED IN ANY PART WITHOUT WRITTEN CONSENT OF THE FIRM'S PRINCIPALS

CERTIFICATION

SCHEMATIC DESIGN NOT FOR CONSTRUCTION

LYTER ACCESSORY STRUCTURE

815 N BAYLEN ST. PENSACOLA, FL 32501

DRAWN BY:	CHECKED BY:
KD	JSS

ISSUE DATE: 2-29-2024

REVISIONS

No.	Des.	Date

SHEET TITLE: **NEW WORK PLANS**

SHEET NO: **A101**

PROJECT NO: Project Number

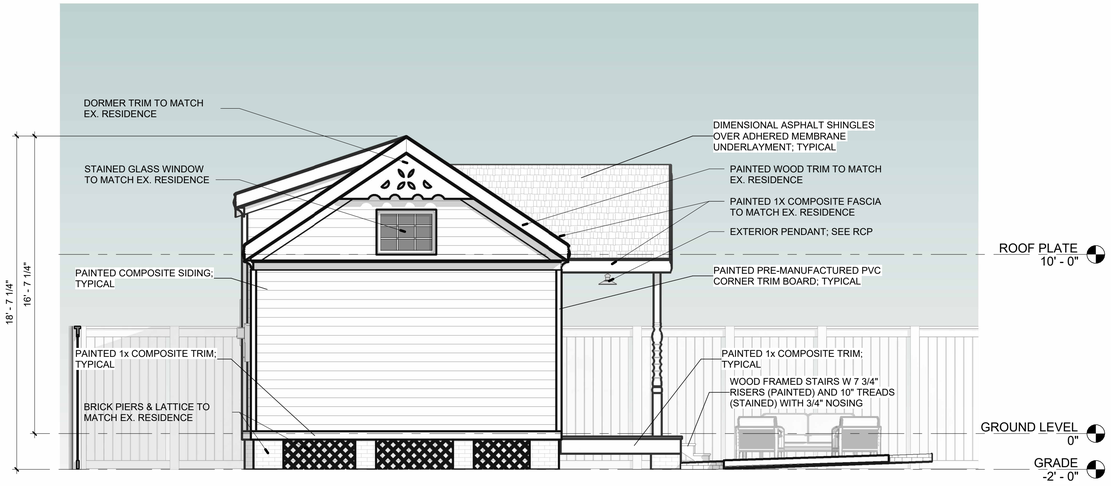

1 SIDE A ELEVATION

1/4" = 1'-0"

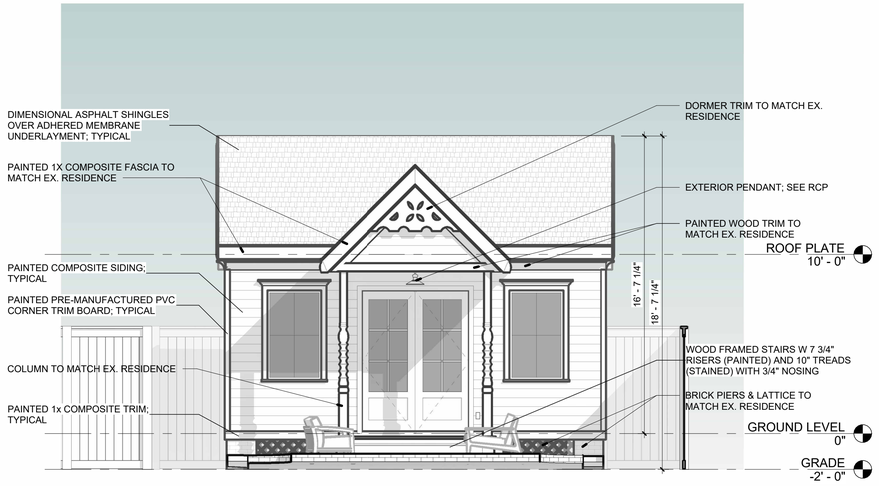

2 FRONT ELEVATION

1/4" = 1'-0"

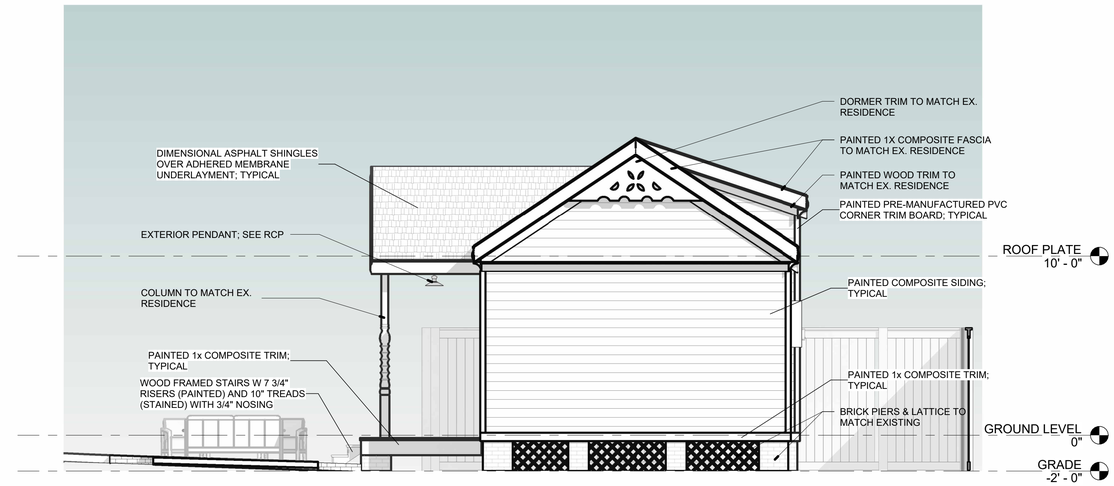

3 SIDE B ELEVATION

1/4" = 1'-0"

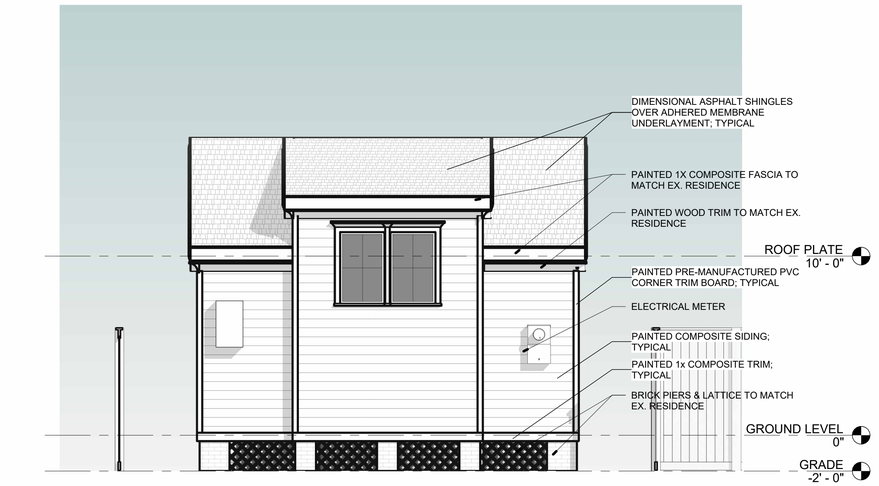

4 REAR ELEVATION

1/4" = 1'-0"



5 Building Section A

1/4" = 1'-0"



6 Building Section B

1/4" = 1'-0"



7 Building Section C

1/4" = 1'-0"

dalrymple | sallis
architecture
503 E. Government St.
Pensacola, FL 32502
v: 850-470-6399
f: 850-470-6397
www.dalsal.com
AR 0016385

THIS DOCUMENT SHOWS ORIGINAL AND UN-PUBLISHED WORK OF THE ARCHITECT AND MAY NOT BE DUPLICATED IN ANY PART WITHOUT WRITTEN CONSENT OF THE FIRM'S PRINCIPALS

CERTIFICATION

SCHEMATIC DESIGN NOT FOR CONSTRUCTION

LYTER ACCESSORY STRUCTURE

815 N BAYLEN ST. PENSACOLA, FL 32501

DRAWN BY:	CHECKED BY:
KD	JSS

ISSUE DATE: 2-29-2024

REVISIONS

No.	Des.	Date

SHEET TITLE: **EXTERIOR ELEVATIONS & BUILDING SECTIONS**

SHEET NO: **A201**

PROJECT NO: Project Number

DOOR TYPES

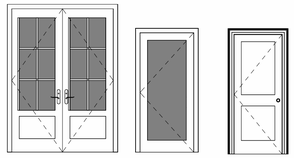

A
ENTRY

B
INTERIOR
FULL LITE

C
PANEL

DOOR NOTES

1. CONTRACTOR TO VERIFY ALL DOOR STYLES, DOOR AND FRAME MATERIALS, AND HARDWARE WITH OWNER.
2. ALL GLAZING IN DOOR TO BE TEMPERED SAFETY GLAZING.
3. WOOD DOORS TO BE SOLID CORE, STAINED. [[if doors are painted, specify all door material as MDF]]
4. PROVIDE DOOR STOPS, BUMPERS, THRESHOLDS AND WEATHERSTRIPS FOR ALL DOORS AS REQUIRED.

DOOR SCHEDULE

Door No.	Type Mark	Door Width	Door Height	Door Material	Comments
001	D	6' - 0"	8' - 0"	FBG	
002	B	3' - 0"	6' - 8"	-	VERIFY DOOR AND HANDLE MATERIAL W/ SAUNA MNFR
003	C	2' - 8"	6' - 8"	WD	

WINDOW TYPES

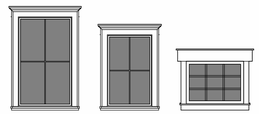

A
FIXED

B
FIXED

C
FIXED

WINDOW NOTES

1. ALL WINDOWS TO BE WOOD-CLAD, IMPACT-RATED PRODUCT, ENSURE EXPOSURE CATEGORY AND WIND PRESSURES SHOWN ON STRUCTURAL ARE MET.
2. ALL WINDOWS TO HAVE MIN. LOW-E GLASS COATING.

WINDOW SCHEDULE

Type Mark	Width	Height	Head Height	Comments
A	3' - 0"	5' - 0"	8' - 0"	
B	2' - 6"	4' - 0"	11' - 4"	
C	3' - 4"	2' - 6"	12' - 6"	

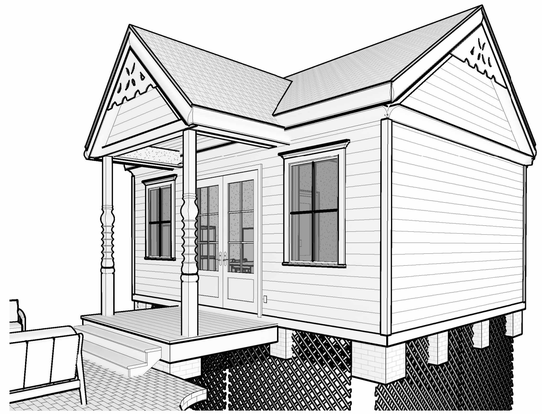

1 3D EXTERIOR PERSPECTIVE 1

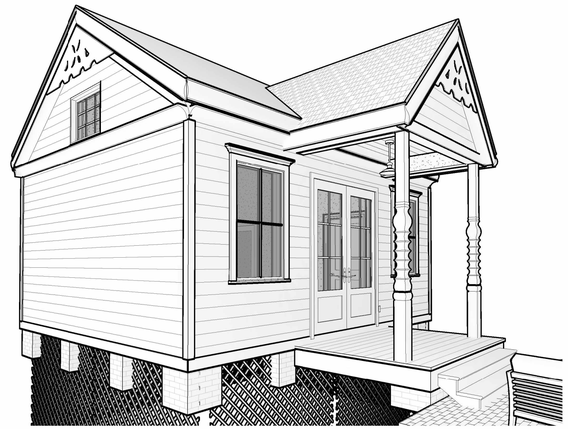

2 3D EXTERIOR PERSPECTIVE 2

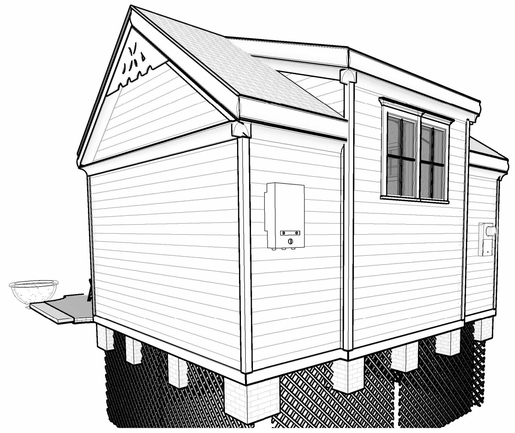

3 3D EXTERIOR PERSPECTIVE 3

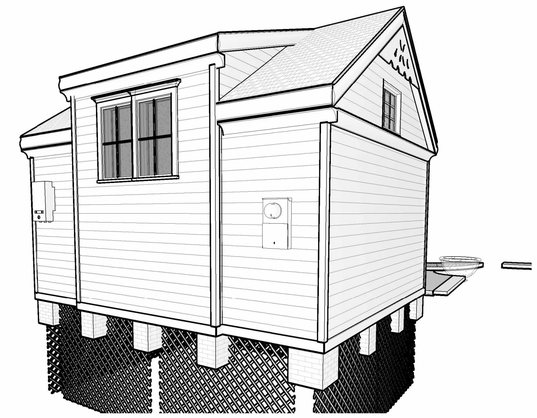

4 3D EXTERIOR PERSPECTIVE 4

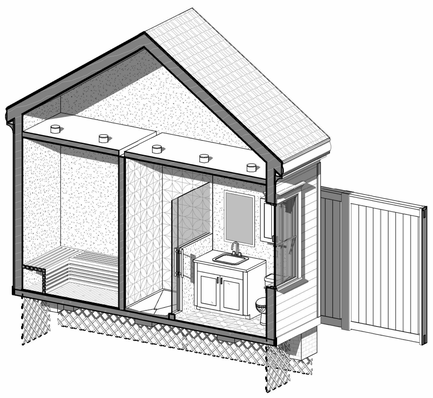

5 3D SECTION A PERSPECTIVE

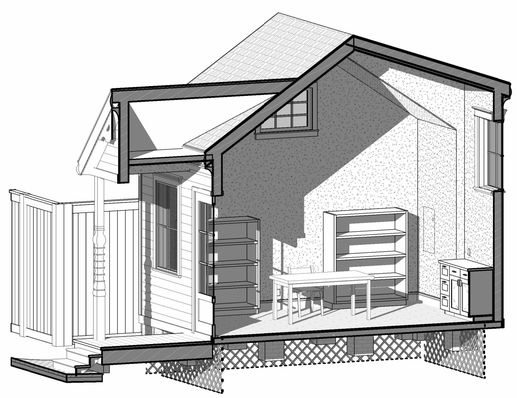

6 3D SECTION B PERSPECTIVE

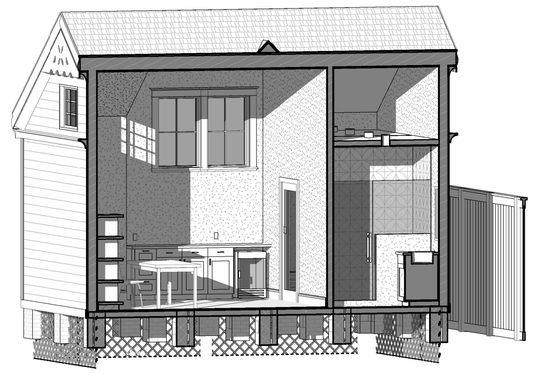

7 3D SECTION C PERSPECTIVE

NOTE: ALL 3D VIEWS ARE CONCEPTUAL AND NOT CONSIDERED CONTRACT DOCUMENTS

dalrymple | sallis
architecture
503 E. Government St.
Pensacola, FL 32502
v: 850-470-6399
f: 850-470-6397
www.dalsal.com
AR 0016385

THIS DOCUMENT SHOWS ORIGINAL AND UN-PUBLISHED WORK OF THE ARCHITECT AND MAY NOT BE DUPLICATED IN ANY PART WITHOUT WRITTEN CONSENT OF THE FIRM'S PRINCIPALS

CERTIFICATION

SCHEMATIC DESIGN NOT FOR CONSTRUCTION

LYTER ACCESSORY STRUCTURE

815 N BAYLEN ST. PENSACOLA, FL 32501

DRAWN BY: KD
CHECKED BY: JSS

ISSUE DATE: 2-29-2024

REVISIONS
No. Des. Date

SHEET TITLE:
3D PERSPECTIVE VIEWS & SCHEDULES

SHEET NO:
A801

PROJECT NO:
Project Number

City of Pensacola

222 West Main Street
Pensacola, FL 32502

Memorandum

File #: 24-286 | Architectural Review Board | 3/21/2024

LEGISLATIVE ACTION ITEM

SUBJECT:

1200 N. Barcelona Street
North Hill Preservation District / Zone PR-1AAA / City Council District 6
Rear Yard Improvements at a Contributing Structure

SUMMARY:

Adrian and Cheryl Russell are seeking approval to replace the existing swimming pool and spa with a new pool and hot tub spa in addition to new landscaping and landscape lighting at a contributing structure.

RECOMMENDED CODE SECTIONS
Sec. 12-3-10(2)d.2.i-ii. North Hill Preservation District; Procedure for review; Decisions; General consideration and Rules governing decisions.
Sec. 12-3-10(2)f. NHPD; Restoration, rehabilitation, alterations or additions to existing contributing structures in the North Hill preservation district.
Sec. 12-3-10(2)h. NHPD; Regulations for new construction and additions to existing structures in the North Hill preservation district.

ATTACHMENTS:

1. Florida Master Site File Form
2. Images
3. Application and Materials

STATE OF FLORIDA
DEPARTMENT OF STATE
Division of Archives, History
and Records Management
Rev. 3/79

FLORIDA MASTER SITE FILE
Site Inventory Form

FDAHRM 802 = =
1009 = =

Site No. ES 323

Site Name Bear, Morris House 830 = = Survey Date 8005 820 = =
Address of Site: 1200 N.Barcelona St. Pensacola, Fl. 32501 905 = =
Instruction for locating on NE corner of N.Barcelona and W.Brainard St. 813 = =

Location: Belmont Tract (subdivision name) 65 (block no.) S 100' of W.1/2 (lot no.) 868 = =
County: Escambia 808 = =
Owner of Site: Name: Garner, Jogn W. and Courtney T.
Address: 1200 N. Barcelona St.
Pensacola, Fl. 32501 902 = =
Type of Ownership Private 848 = = Recording Date 8005 832 = =
Recorder:
Name & Title: Gantzhorn, Alan; Guedez, Susan
Address: HPPB 818 = =

Condition of Site: Integrity of Site: Original Use Residence 838 = =

Check One		Check One or More		
Excellent	863 = =	[ ] Altered	858 = =	Present Use Residence 850 = =
Good	863 = =	[ ] Unaltered	858 = =	Dates: Beginning +1927 844 = =
Fair	863 = =	[ ] Original Site	858 = =	Culture/Phase American 840 = =
Deteriorated	863 = =	[ ] Restored ( ) (Date:) ( )	858 = =	Period 20th Century 845 = =
		[ ] Moved ( ) (Date:) ( )	858 = =	

NR Classification Category: District 916 = =

Threats to Site:

Check One or More			
[ ] Zoning ( )	( ) 878 = =	[ ] Transportation ( )	( ) 878 = =
[ ] Development ( )	( ) 878 = =	[ ] Fill ( )	( ) 878 = =
[ ] Deterioration ( )	( ) 878 = =	[ ] Dredge ( )	( ) 878 = =
[ ] Borrowing ( )	( ) 878 = =		
[ ] Other (See Remarks Below):	878 = =		

Areas of Significance: Architecture, History 910 = =

Significance:

An excellent example of Mediterranean Revival architecture in the Italian mode, this home was constructed during North Hill's second building boom during the 1920's. Morris Bear had inherited the presidency of a major Pensacola grocery firm, the Lewis Bear Co. In addition, he was vice-president of the American National Bank.

SEE SITE FILE STAFF FOR ORIGINAL PHOTO(S) OR MAP(S)

911 = =

ARCHITECT Unknown 872 = =

BUILDER Breen, William 874 = =

STYLE AND/OR PERIOD Mediterranean Revival 964 = =

PLAN TYPE Irregular 966 = =

EXTERIOR FABRIC(S) Brick: common bond 854 = =

STRUCTURAL SYSTEM(S) Masonry 856 = =

PORCHES E/ 1 story shed with brick piers, access from S # 942 = =

W&E/ wrought ironbalcony 942 = =

FOUNDATION: Continuous: brick 942 = =

ROOF TYPE: Hip 942 = =

SECONDARY ROOF STRUCTURE(S): 2 story hipped extension S 942 = =

CHIMNEY LOCATION: S: slope 942 = =

WINDOW TYPE: DHS,8/8,wood#SHS,arched 8/8,wood#DHS4/1,wood 882 = =

CHIMNEY: brick 882 = =

ROOF SURFACING: Tile: Spanish 882 = =

ORNAMENT EXTERIOR: Roman columns and arched marble ent. 950 = =

NO. OF CHIMNEYS 1 952 = = NO. OF STORIES 2 954 = =

NO. OF DORMERS 0

Map Reference (incl. scale & date) USGS 7.5 MIN Pensacola 1970 809 = =

North Hill, Gordon Richmond, 1974

Latitude and Longitude: ° ' " ° ' " 800 = =

Site Size (Approx. Acreage of Property): LT 1 833 = =

LOCATION SKETCH OR MAP N

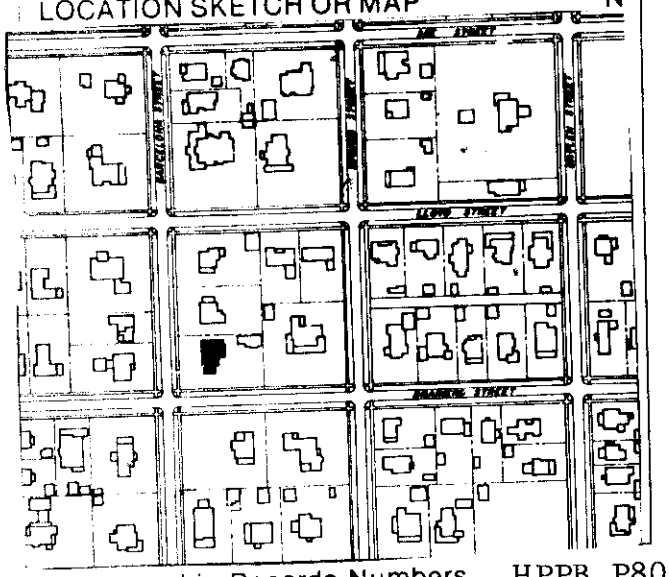

Township	Range	Section
2S	30W	19

812 = =

UTM Coordinates: 890 = =

Zone Easting Northing

Photographic Records Numbers HPPB P80.6 Fr. 31A,33A,34A,35A 860 = =

Contact Print

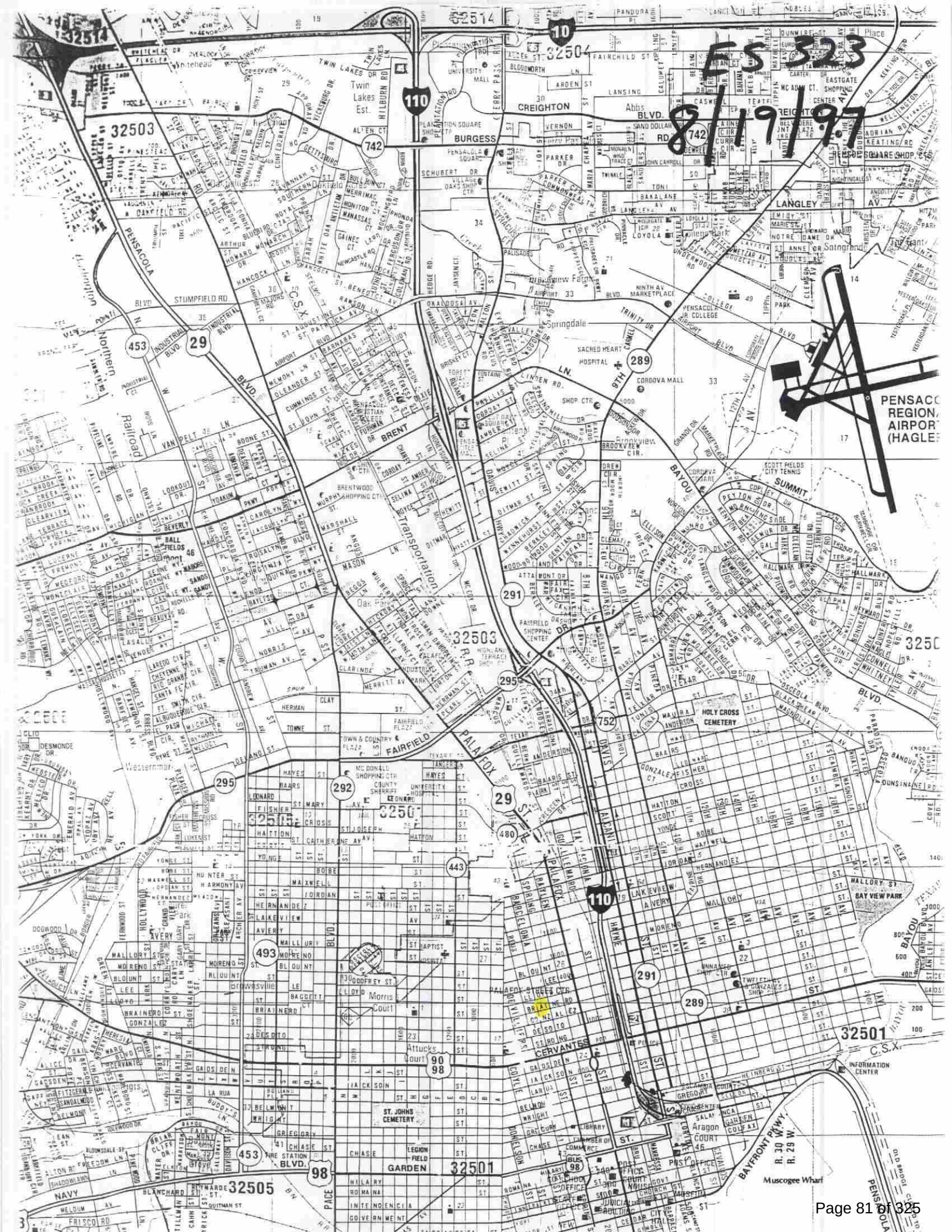
ES 523
8/19/97
PENSACO
REGION
AIRPOR
(HAGLE
32514
32503
32504
32505
32501
CREIGHTON
BURGESS
LANGLEY
PENSACOLA
BLVD.
BRENT
FAIRFIELD
PALAFOX
CERVANTES
GARDEN
NAVY
BAYOU
SUMMIT
HOLY CROSS CEMETERY
ST. JOHNS CEMETERY
BAY VIEW PARK
INFORMATION CENTER
Muscogee Wharf
BAYFRONT PKWY.
R. 30 W.
R. 29 W.
Twin Lakes Est.
Springdale
Brookview
Oak Park
Morris Court
Attucks Court
Aragon Court
Brownsville
Westernmar
Northern Railroad
Transportation
C.S.X.
10
110
742
29
453
289
291
295
752
292
480
443
493
90
98

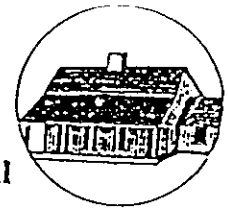

HISTORICAL STRUCTURE FORM
FLORIDA SITE FILE
Version 2.0 7/92

__ Original
_X_ Update

Site #8 ES00323
Recorder #
Field Date 5/3/95
Form Date 6/23/95

SITE NAMES (addr. if none) MORRIS BEAR HOUSE [MULT. LIST. #8]
SURVEY NORTH HILL [SURVEY #]
NATIONAL REGISTER CATEGORY __building __structure X_district __site __object

LOCATION & IDENTIFICATION

ADDRESS (Include N,S,E,W; st., ave., etc.) 1200 N. BARCELONA ST.
CROSS STREETS nearest/between NE CORNER OF N. BARCELONA AND W. BRAINERD ST.
NEAREST CITY/TOWN PENSACOLA
COUNTY ESCAMBIA IN CURRENT CITY LIMITS Xyes __no
SUBDIVISION NAME NORTH HILL BLOCK 65 TAX PARCEL # 9010-001-065
OWNERSHIP __private-profit __priv-nonprofit X_priv-indiv __priv-unspecified __city __county __state __federal __unknown
NAME OF PUBLIC TRACT (e.g., park) BELMONT LOT NO.
ROUTE TO

MAPPING

USGS 7.5' MAP NAME 30087-D2-TF-024 1987
TOWNSHIP 25 RANGE 30W SECT. 19 1/4 1/4-1/4 IRREG. SECT.? y n
[UTM: ZONE 16 17 EASTING 0 NORTHING 0]
PLAT OR OTHER MAP (Map's name, location)

DESCRIPTION

STYLE ITAL EXTERIOR PLAN IRRE NO. STORIES 2
STRUCTURAL SYSTEMS MASO
FOUNDATION: Types CONT Materials BRIC
EXTERIOR FABRICS BRIC
ROOF: Types HIP Materials TILE
Secondary strucs. (dormers etc.) HIP
CHIMNEY : No. 1 Materials BRIC LOCATIONS S. SLOPE
WINDOWS (types, materials, and placements) DHS, 8/1, WOOD and SHS ARCHED 8/1 - WOOD AND DHS 4/1, WOOD AND FIXED ARCHED WINDOWS WITH WINGS
MAIN ENTRANCE (stylistic details)
PORCHES: #open ___ #closed ___ #incised ___ Locations E/1 STORY SHED WITH BRICK PIERS
Porch roof types S. ACCESS AND E & W/ WROUGHT IRON BALCONY
EXTERIOR ORNAMENT FLUTED ROMAN COLUMNS, MARBLE ARCHED DOORWAY WITH MARBLE MEDALLION
INTERIOR PLAN CONDITION: __excellent X_good __fair __deteriorated __ruinous
SURROUNDINGS (N-None, S-Some, M-Most, A-All or nearly all) __commercial A_residential __institutional __rural
ANCILLARY FEATURES (No., type of outbuildings; major landscape features)

ARCHAEOLOGICAL REMAINS AT SITE Archaeological form completed? _y _n (No-explain; yes-attach!)
Artifacts or other remains
NARRATIVE (E.g. description of interior, landscape, architecture, etc; please limit to 3 lines and attach full statement on separate sheet)

HISTORICAL STRUCTURE FORM

Site #8_____

HISTORY

CONSTRUCTION DATE 1927 CIRCA X yes __no
ARCHITECT: (last name first) UNKNOWN
BUILDER: (last name first) BREEN, WILLIAM
MOVES __yes X no Dates _____ Orig.addr._____
ALTERATIONS __yes __no Dates _____ Nature _____
ADDITIONS __yes __no Dates _____ Nature _____
ORIGINAL USES (give dates) RESIDENCE
INTERMEDIATE USES (give dates)_____
PRESENT USES (give dates) RESIDENCE
OWNERSHIP HISTORY (especially original owner) MORRIS BEAR (ORIGINAL)
KEITH L. AND SANDRA S. CHRISTENSEN (CURRENT)

SURVEYOR'S EVALUATION OF SITE

Potentially elig. for local designation? _yes _no _insuff. info
Individually elig. for Nat. Register? _yes _no _insuff. info
Potential contributor to NR district? _yes _no _insuff. info

Local Designation Category
_____
_____

HISTORICAL ASSOCIATIONS (ethnic heritage, etc.)_____

EXPLANATION OF EVALUATION (required; limit to three lines; attach full statement on separate sheet)

CROSS-REFERENCES

BIBLIOGRAPHIC REFERENCES (Author, date, title, publication information. If unpublished, give FSF Manuscript Number, or location where available) _____

PHOTOGRAPHS (REQUIRED) B&W print(s) at least 3 x 5, at least one main facade. Label the back of the print with the FSF site number (site name if not available), direction and date of photograph: use pencil. Attach to back of the second to last page with a plastic or coated clip. Location of negatives/neg. nos. R12, F35-36

RECORDER

NAME (last first)/ADDR/PHONE/AFFILIATION HPPB

FOR DETAILED INSTRUCTIONS: *Guide to the 1992 Historic Structure Form of the Florida Site File.*

DHR USE ONLY	OFFICIAL EVALUATIONS	DHR USE ONLY
NR DATE / /	KEEPER-NR ELIGIBILITY*: y n pe ui	Date / /
DELIST DATE / /	SHPO-NR ELIGIBILITY*: y n pe ui	Date / /
	LOCAL DESIGNATION*:_____	Date / /
	Local office	

* y=Yes; n=No; pe=Potentially Eligible; ui=Insufficient Information

REQUIRED:
(1) USGS MAP WITH STRUCTURE PINPOINTED
(2) LARGE SCALE STREET OR PLAT MAP
(3) PHOTO OF MAIN FACADE, PREFER B&W, AT LEAST 3X5


Radio Tower
Pensacola High Sch
McMillan Sch
Bibbs Sch
JORDAN
PALAFOX
Pensacola Christian Sch
Playground
AVERY
St Anthonys Sch
Sacred Hea Sch
Cobb Center
Park
Radio Tower
Baptist Hospital
MORENO
REUS
LEE
Yonge Sch
LLOYD
BRAINERD
PENSACOLA
Dixon Sch
SOTO
Park
CERVANTES
Beggs Vocational Sch
Water Tank
4 LANE
St Michaels Sch
JACKSON
Gibson Sch
Park
Radio Tower
YMCA
WRIGHT
St Johns Cem
Bus Depot
Fire Sta
Library
Armory
St Michae Cem
Legion Field
Blount Middle Sch
Berean Sch
Police Sta
GARDEN
St Stephens Sch
ROMANA
Playground
Hallmark Sch
St Josephs Sch
Courthouse
Seville Squ
City Hall
Museum
GOVERNMENT
Sewage Disposal
MAIN
BURLINGTON NORTHERN
BARRANCAS
Radio Tower
Pensacola Port Authority
Municipal Auditorium
Chico
Sanders Beach
INNER HARBOR
CHANNEL
EAST

ES00323





1200 N. Barcelona Street

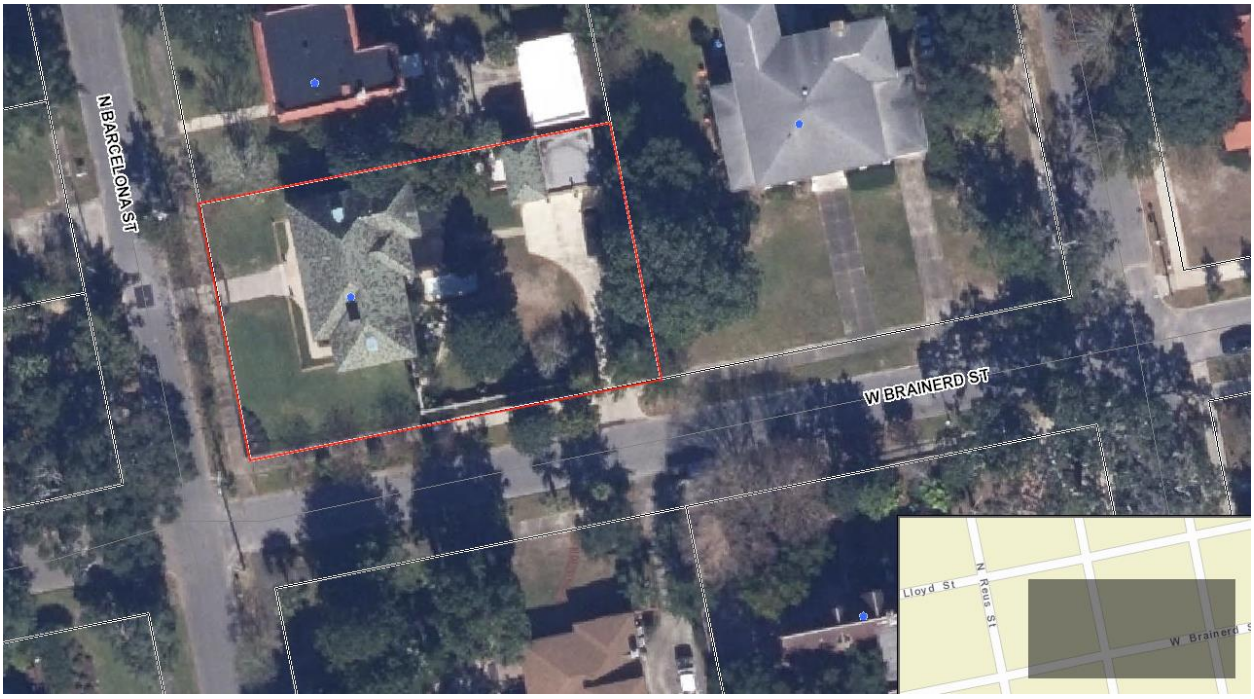



City of Pensacola
America's First Settlement And Most Historic City

Architectural Review Board Application
Full Board Review

Application Date: February 22, 2024

Project Address: **1200 N. Barcelona St, Pensacola, Fl 32501**

Applicant: Adrian & Cheryl Russell

Applicant's Address: 1200 N. Barcelona St, Pensacola, Fl 32501

Email: ACRuss131@gmail.com Phone: 850-602-1854

Property Owner: _____
(If different from Applicant)

District: ☐ ***PHD*** ☑ ***NHPD*** ☐ ***OEHPD*** ☐ ***PHBD*** ☐ ***GCD***

Application is hereby made for the project as described herein:

☑ Residential Homestead – $50.00 hearing fee

☐ Commercial/Other Residential – $250.00 hearing fee

** An application shall be scheduled to be heard once all required materials have been submitted and it is deemed complete by the Secretary to the Board. You will need to include eight (8) copies of the required information. Please see pages 3 – 4 of this application for further instruction and information.*

Project specifics/description:
PLEASE SPECIFY IF CONCEPTUAL DISCUSSION ITEM, CONCEPTUAL REVIEW, OR FINAL REVIEW.

Since purchasing our new house 6 months ago, we want very much to be good stewards of the home. We are excited to address many of the opportunities to fully enhance both the value added potential as well as address a great deal of deferred maintenance including most recently a complete repair of the roof system (while staying with the historically accurate and original Ludowici tile at significant cost).
With this application, our key areas of focus are to improve our backyard living space. We want to optimize the functionality and usage of the backyard by replacing the existing pool and spa with a new pool and hot tub spa that includes not only energy efficient renovations but smart home technologies. Our goal is to also enhance curb appeal with significant landscaping improvements and provide properly installed lighting elements around all sides of the house. We want to make a significant investment in an attempt to preserve, restore, and enhance this historic home.

I, the undersigned applicant, understand that payment of these fees does not entitle me to approval and that no refund of these fees will be made. I have reviewed the applicable zoning requirements and understand that I must be present on the date of the Architectural Review Board meeting.

Adrian & Cheryl Russell — 2/27/2024

Applicant Signature — Date

Planning Services
222 W. Main Street * Pensacola, Florida 32502
(850) 435-1670
Mail to: P.O. Box 12910 * Pensacola, Florida 32521



Front of House



Left Side of House





Right Side of House



Back Yard



Front of Garage



Street View

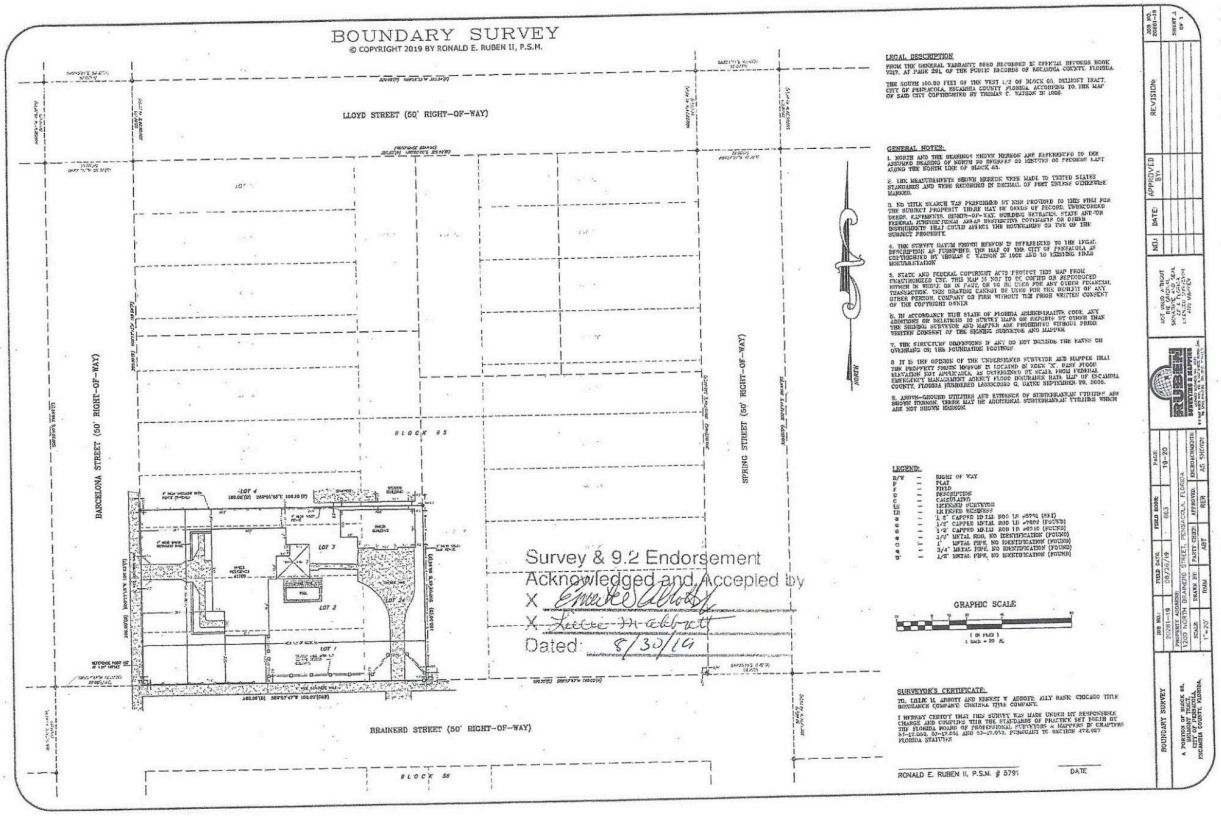

House Survey



Current pool & spa



Current Backyard

















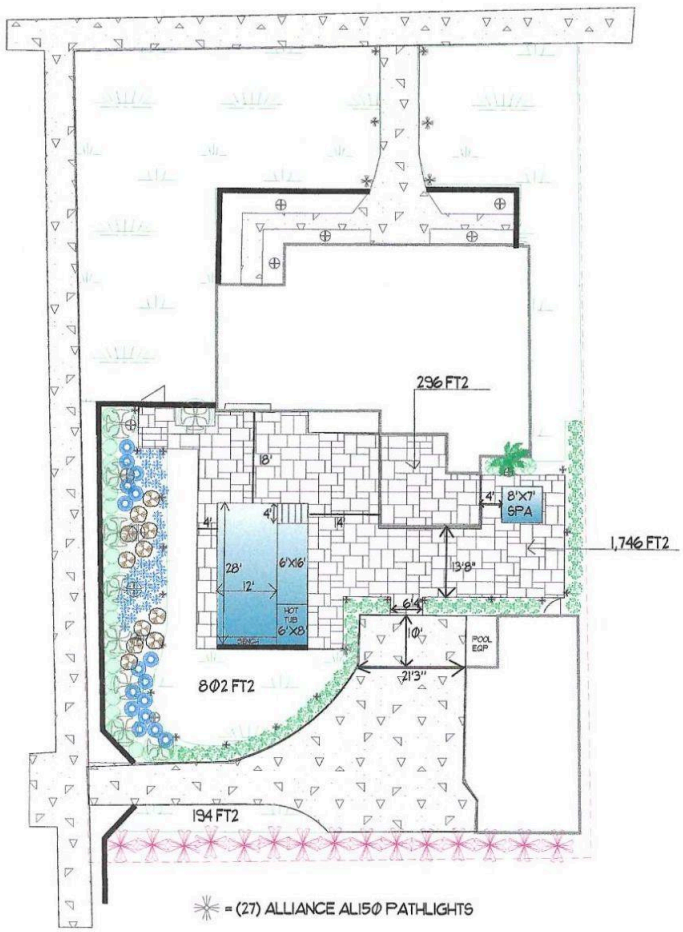

LEGEND

COMMON NAME	QTY	BOTANICAL NAME	SIZE
FLOWER, PERENNIAL			
IRIS, BLUE REGINA	41	IRIS 'BLUE REGINA'	1 GAL
LEOPARD PLANT, GAINT	24	LIGULARIA TUSSILAGINEA GIGANTEA	3 GAL
SHRUB, EVERGREEN BROADLEAF			
CAMELLIA, SHISHI-GASHIRA	11	CAMELLIA HIEMALIS SHISHI-GASHIRA	3GAL.
LIGUSTRUM, VARIEGATED	9	LIGUSTRUM, JAPONICUM	30 GAL
MOCK ORANGE	26	PITTOSPORUM TOBIRA 'VARIEGATA'	3 GAL.
PHILODENDRON, MONSTERA	3	PHILODENDRON, SELLOUM	3 GAL.
VIBURNUM, SANDANKWA	15	VIBURNUM SUSPENSUM	7 GAL.
YEW, JAPANESE PODOCARPUS	41	PODOCARPUS MACROPHYLLUS	15 GAL.
SOD			
ZOYSIA 'PALISADES'	3	ZOYSIA JAPONICA 'PALISADES'	PALLET
TREE, EVERGREEN			
PALM, WINDMILL	2	TRACHYCARPUS FORTUNEI	8'

Revision #:	Scale:	Landscape Plan:	Landscape Design by:
Date: 2/26/2024	1" = 20'	1200 N. Barcelona St.	Outerspaces Landscapes

N

Landscaping & Pool Design

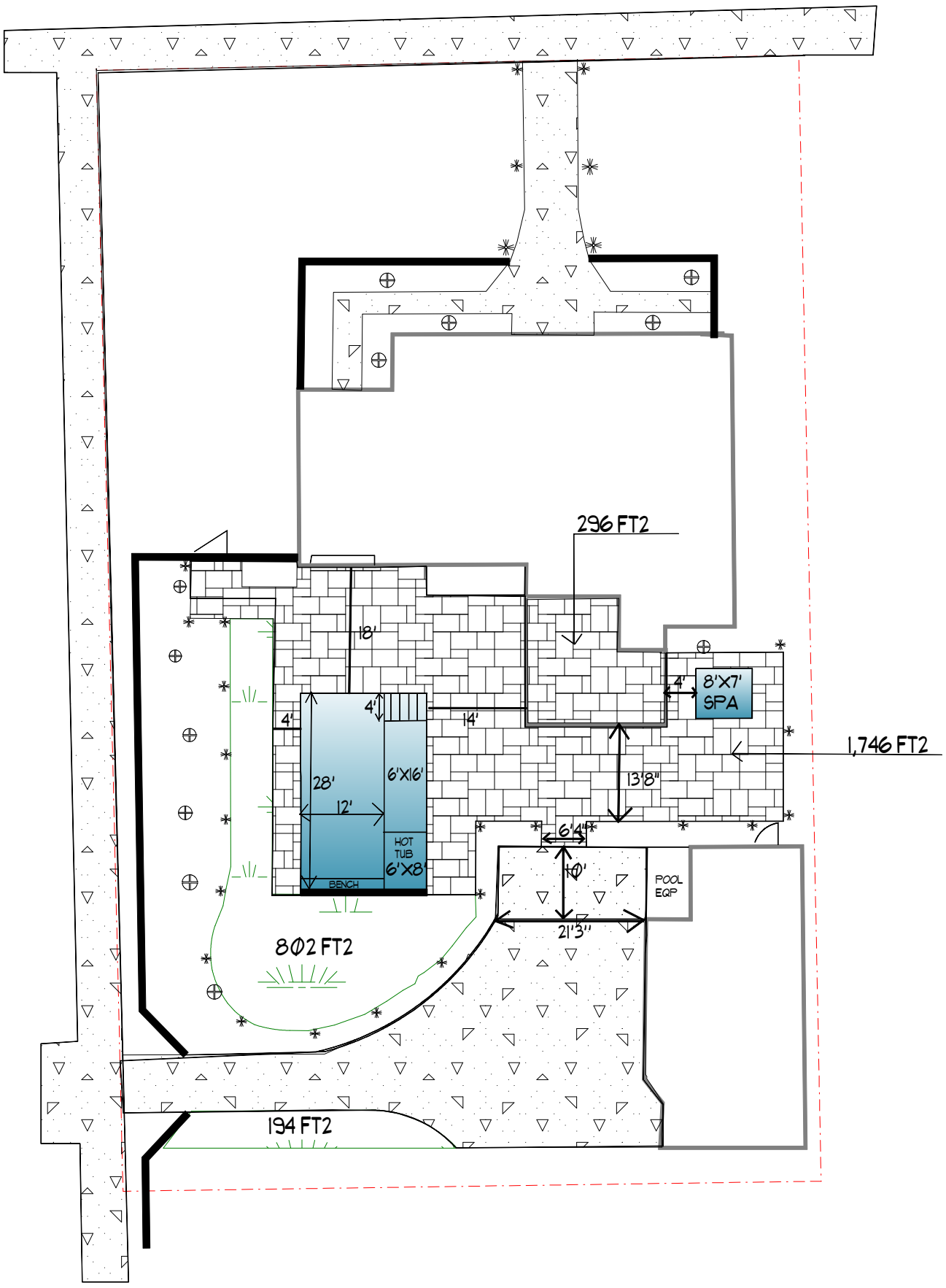

= (27) ALLIANCE AL150 PATHLIGHTS

= (13) ALLIANCE BL110 BULLET UPLIGHT

Revision #:	Scale:	Landscape Plan:	Landscape Design by:
Date: 3/8/2024	1" = 20'	1200 N. Barcelona Light Plan	Outerspaces Landscapes

N



Pool Rendering **ONLY** from Parker Pools. Not depiction of landscaping. View landscaping details on page 11.



Pool Rendering **ONLY** from Parker Pools. Not depiction of landscaping. View landscaping details on page 11.

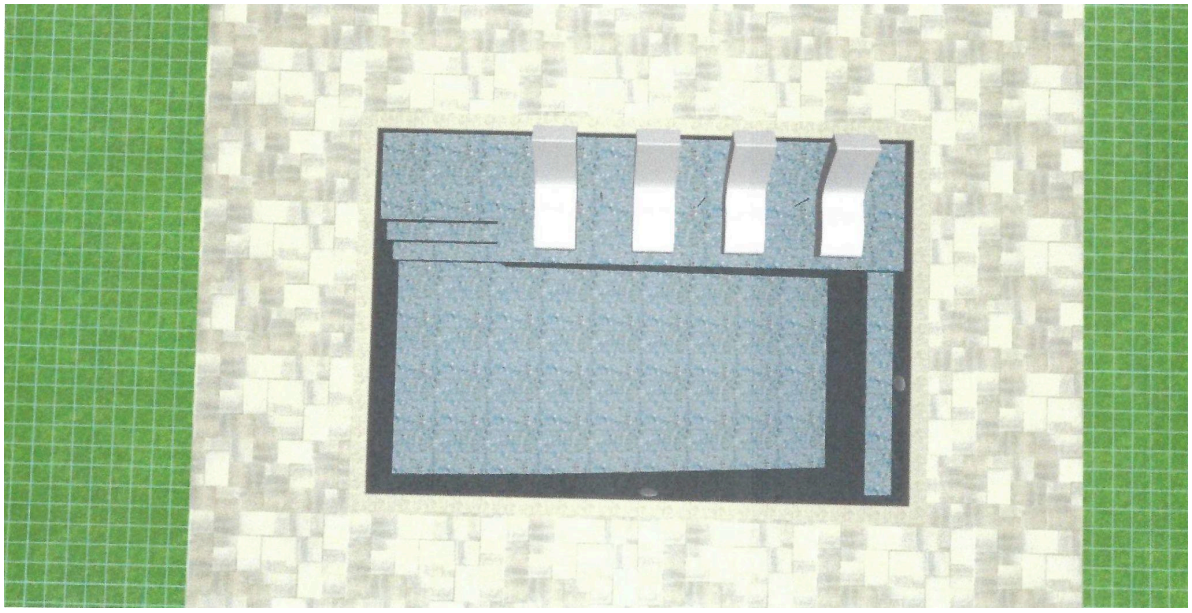

Pool Rendering **ONLY** from Parker Pools. Not depiction of landscaping. View landscaping details on page 11.

AL150
AREA & PATH

Home • Fixtures • Area & Path • AL150



FINISH OPTIONS



Aged Brass (Standard)



Premium Black Overcoat (Optional) -BLK

Designed for easy inventory, and mix-and-match design flexibility, our area lights are ordered in two components.

MOUNTING / INSTALLATION

Lead Wire Length: Dual 16AWG wire leads (option to daisy chain), first 25', second 18"

Mounting: Slotted 8.5" large ground stake (standard)

More Options ▸

MATERIAL

Housing: Solid cast brass (hat and stem)

Lens: Polycarbonate frosted lens with rubber gaskets both clear and frosted provided

Socket: G4 Bi-Pin, Spring-loaded ceramic, with dual contacts and lamp clips

Adjustable Beam: Stem incorporates adjustable collar for light spread and glare control

Spec Sheet | Installation Details | Photometrics

DIMENSIONS

HEIGHT	2"
WIDTH	6.25"
LENGTH	Recommended for use with 12" and 18" stem.

CUSTOMIZE YOUR STEM AND HAT COMBO

The stem is sold separately from this AL150 hat. Choose your stem height and light source (standard LED lamp or BT Bluetooth RGB module)



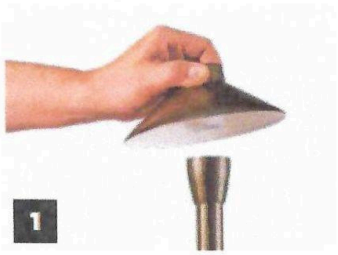

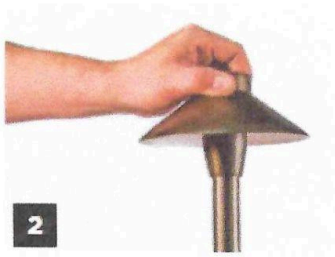

Stem Options - Standard LED or No Lamp

PART NUMBER	HEIGHT	LED LAMP INSTALLED
ALSTEM12-LED	12"	LBIPIN-LED-200LM 2.5 WATT 2700K
ALSTEM18-LED	18"	LBIPIN-LED-200LM 2.5 WATT 2700K
ALSTEM24-LED	24"	LBIPIN-LED-200LM 2.5 WATT 2700K
ALSTEM12	12"	NO LAMP
ALSTEM18	18"	NO LAMP
ALSTEM24	24"	NO LAMP
ALSTEMADJ-LED	18"-29" (ADJ.)	LBIPIN-LED-200LM 2.5 WATT 2700K
ALSTEMADJ	18"-29" (ADJ.)	NO LAMP

Stem Options - RGB LED Bluetooth Module

PART NUMBER	HEIGHT	LED LAMP INSTALLED
ALSTEM12-BT	12"	BT SYSTEM LED MODULE
ALSTEM18-BT	18"	BT SYSTEM LED MODULE

FACTORY-INSTALLED RGB LED BLUETOOTH MODULE

WATTAGE	2w - 6w

LUMEN OUTPUT	10lm - 350lm
CCT OPTIONS	2700K, 3000K, 4000K
RGB OPTIONS	Unlimited color wheel, quick preset options for red, green, blue, amber and purple
DIMMING	Option available for every color choice.

HOW TO SPECIFY

SELECT FIXTURE HAT	SELECT STEM	OPTIONS
EXAMPLE: AL150	EXAMPLE: **ALSTEM18-BT**	If ground stake is not desired, see mounting options.

For black finish add -BLK to part number.

Path Lighting

BL110

ACCENT/UPLIGHT

Home • Fixtures • Accent/Uplight • BL110

Sleek linear design with adjustable shroud. A highly-versatile workhorse fixture.





FINISH OPTIONS



Aged Brass (Standard)



Premium Black Overcoat (Optional) -BLK

MOUNTING / INSTALLATION

Wire Lead: Dual 16AWG wire leads (option to daisy chain), first 25', second 18".

Mounting: Slotted 8.5" ground stake (standard)

More Options ▸

MATERIAL

Housing: Solid cast brass.

Knuckle: Solid cast brass, knob for angle adjustment.

Socket: Spring-loaded ceramic bi-pin MR16, with dual contacts and lamp clips.

Shroud & Lens: Solid cast brass, with dual o-ring seal, with convex tempered, shock-resistant glass lens.

Optional Lenses: Frosted lens, hex louver.

LIGHT SOURCE OPTIONS

Choose factory-installed MR16 lamp below. Also available without lamp.

Spec Sheet | Installation Details | Photometrics

DIMENSIONS

HEIGHT	1.75"
LENGTH/DEPTH	7.5"
WIDTH	2.25"

FACTORY-INSTALLED LAMP OPTIONS

ADD-SUFFIX	WATTAGE	BEAM ANGLE	DELIVERED LUMENS	COLOR TEMPERATURE	BASE COLOR CODE
-LED4W-NS	4	15	250	2900K	BLACK
-LED4W	4	45	250	2900K	BLACK
-LED4W-WF	4	60	250	2900K	BLACK
-LED5W-NS	5	15	310	2900K	WHITE
-LED5W	5	45	310	2900K	WHITE
-LED5W-WF	5	60	310	2900K	WHITE
-LED6W	6	145	400	2900K	BLUE

HOW TO SPECIFY

FIXTURE	CHOOSE LIGHT SOURCE	ORDER ACCESSORIES
BL110 add **-BLK** for black overcoat	Add suffix for lamp (see above) (blank for no lamp)	Mounting Risers Lenses

Example: BL110-BLK-LED5W

Up Lighting



Concrete Pavers 18” x 24”: From RiverstoneWorks.com The pavers are a travertine look to match the old world style of the house.

HIGHLIFE® COLLECTION

Strikingly Beautiful

Bold, yet elegant. Fresh, yet timeless. Graceful, yet powerful. The Highlife® Collection redefines how a hot tub looks. Elegantly contoured corners reveal accent lights that beckon you closer. Stainless steel and brushed metal finishes add richness and refinement. Clean lines, rich finishes and durable materials all work together in harmony to create a unique look that both inspires and endures.



Shown with Blackwood cabinet and Platinum shell.

HotSpring Spa

HIGHLIFE® COLLECTION



GRANDEE®

7 Seats
Open Seating
8'4" x 7'7" x 38"
254 cm x 231 cm x 97 cm
230 V

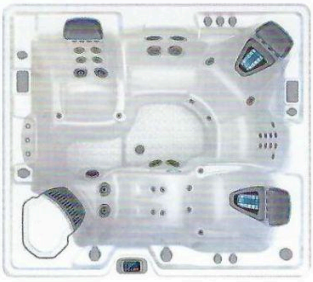

ENVOY®

5 Seats
Lounge Seating
8'4" x 7'7" x 38"
254 cm x 231 cm x 97 cm
230 V

22498



VANGUARD®

6 Seats
Open Seating
7'3" x 7'3" x 36"
221 cm x 221 cm x 91 cm
230 V



JETSETTER® LX

3 Seats
Lounge Seating
7' x 5'8" x 33"
213 cm x 173 cm x 84 cm
230 V



JETSETTER®

3 Seats
Lounge Seating
7' x 5'8" x 33"
213 cm x 173 cm x 84 cm
115 V or 230 V



VISUALIZE THESE SPAS IN YOUR SPACE

Download the free Virtual View™ AR app and use augmented reality to see how a Hot Spring spa can transform your space.



ARIA®

5 Seats

Lounge Seating

7'3" x 7'3" x 36"

221 cm x 221 cm x 91 cm

230 V



SOVEREIGN®

5 Seats

Lounge Seating

6'8" x 7'9" x 33"

203 cm x 236 cm x 84 cm

230 V



PRODIGY®

5 Seats

Open Seating

7' x 6'6" x 33"

213 cm x 198 cm x 84 cm

230 V

	Grandee®	Envoy®	Vanguard®	Aria®	Sovereign®	Prodigy®	Jetsetter® LX	Jetsetter®
Jets	49	55	42	42	32	28	30	22
Water Capacity	455 gal 1,725 L	455 gal 1,725 L	375 gal 1,425 L	365 gal 1,400 L	330 gal 1,250 L	270 gal 1,025 L	250 gal 950 L	245 gal 925 L
Filled Weight	5,810 lb 2,645 kg	5,455 lb 2,480 kg	4,890 lb 2,225 kg	4,600 lb 2,110 kg	4,230 lb 1,920 kg	3,705 lb 1,685 kg	3,125 lb 1,425 kg	3,070 lb 1,390 kg
Entertainment	Optional	Optional	Optional	Optional	Optional	Optional	Optional	Optional
Lighting	Interior & Exterior	Interior & Exterior	Interior & Exterior	Interior & Exterior	Interior & Exterior	Interior & Exterior	Interior & Exterior	Interior & Exterior
Circulation Pump	SilentFlo 5000®	SilentFlo 5000	SilentFlo 5000	SilentFlo 5000	SilentFlo 5000	SilentFlo 5000	SilentFlo 5000	SilentFlo 5000
Filtration	100% No-Bypass	100% No-Bypass	100% No-Bypass	100% No-Bypass	100% No-Bypass	100% No-Bypass	100% No-Bypass	100% No-Bypass
Insulation	High Density Foam	High Density Foam	High Density Foam	High Density Foam	High Density Foam	High Density Foam	High Density Foam	High Density Foam
Water Care System	FreshWater® Salt System Ready	FreshWater Salt System Ready	FreshWater Salt System Ready	FreshWater Salt System Ready	FreshWater Salt System Ready	FreshWater Salt System Ready	FreshWater Salt System Ready	FreshWater Salt System Ready

JAVA

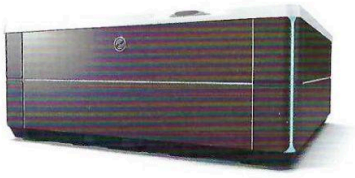

SHELL

Alpine White | Ice Gray | Ivory | Tuscan Sun | Pebble

COVER

Nutmeg

CHARCOAL

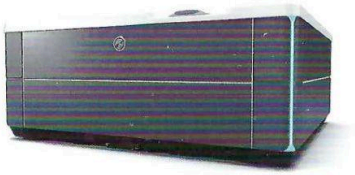

SHELL

Alpine White | Ice Gray | Platinum | Tuscan Sun | Pebble

COVER

Graphite

BLACKWOOD

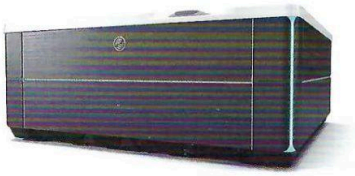

SHELL

Alpine White | Ice Gray | Platinum

COVER

Graphite

LINEN



SHELL

Alpine White | Ivory | Tuscan Sun | Pebble

COVER

Nutmeg

BRUSHED NICKEL



SHELL

Alpine White | Ice Gray | Platinum

COVER

Graphite

ADDITIONAL POLYESTER COVER OPTIONS

Gray | Black

Actual colors and products may vary from print representation. See dealer to verify.

File #: 24-287 | Architectural Review Board | 3/21/2024

LEGISLATIVE ACTION ITEM

SUBJECT:

50 W. Brainerd Street
North Hill Preservation District / Zone PR-1AAA / City Council District 6
Exterior Alterations at a Contributing Structure

SUMMARY:

Ken Torrance is seeking approval to replace one window, three exterior doors, and two decks at a contributing structure. The window and doors have been installed, resulting in a stop worker order issued in late 2023. The applicant is proposing one Andersen 400 series vinyl clad wood casement window with grilles-between-the-glass but is open to adding applied muntins, one Andersen aluminum clad exterior door, and two Andersen 400 series Frenchwood hinged patio doors. The proposed side and rear decks will replace previous deck structures and will be constructed of Trex with black powder coated aluminum preassembled deck railing.

RECOMMENDED CODE SECTIONS
Sec. 12-3-10(2)d.2.i-ii. North Hill Preservation District; Procedure for review; Decisions; General considerations and Rules governing decisions.
Sec. 12-3-10(2)f.1-2. NHPD; Restoration, rehabilitation, alterations or additions to existing contributing structures in the North Hill preservation district.

ATTACHMENTS:

1. Florida Master Site File Form
2. Images
3. Application and Materials

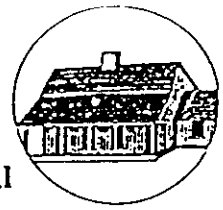

HISTORICAL STRUCTURE FORM
FLORIDA SITE FILE
Version 2.0 7/92

__ Original
x Update

Site #8 ES00594
Recorder #
Field Date 5/4/95
Form Date 6/27/95

SITE NAMES (addr. if none) W. S. ROSASCO JR. HOUSE [MULT. LIST. #8]
SURVEY NORTH HILL [SURVEY # 4758]
NATIONAL REGISTER CATEGORY X building __structure X district __site __object

LOCATION & IDENTIFICATION

ADDRESS (Include N,S,E,W; st., ave., etc.) 50 W. BRAINERD ST.
CROSS STREETS nearest/between BETWEEN N. BAYLEN AND N. PALAFOX ST.
NEAREST CITY/TOWN PENSACOLA IN CURRENT CITY LIMITS X yes __no
COUNTY ESCAMBIA TAX PARCEL # 9010-005-063
SUBDIVISION NAME NORTH HILL BLOCK 63 LOT NO. p 1-5, 26-30
OWNERSHIP __private-profit __priv-nonprofit X priv-indiv __priv-unspecified __city __county __state __federal __unknown
NAME OF PUBLIC TRACT (e.g., park) BELMONT
ROUTE TO

MAPPING

USGS 7.5' MAP NAME 30087-D2-TF-024 1987
TOWNSHIP 25 RANGE 30W SECT. 19 1/4 ___ 1/4-1/4 ___ IRREG. SECT.? __y __n
[UTM: ZONE 16 17 EASTING | | | | | | 0 | NORTHING | | | | | | | 0 |]
PLAT OR OTHER MAP (Map's name, location)

DESCRIPTION

STYLE ~~SPRV~~ MEDR EXTERIOR PLAN RECT NO. STORIES 1
STRUCTURAL SYSTEMS MASO
FOUNDATION: Types SLAB Materials CONC
EXTERIOR FABRICS STUC
ROOF: Types GA Materials TISP
Secondary strucs. (dormers etc.) CRGA
CHIMNEY : No. 1 Materials BRIC/STUC LOCATIONS SOUTH EXTERIOR
WINDOWS (types, materials, and placements) FRENCH 10 LIGHT, WOOD AND FIXED, 12 LIGHT, WOOD

MAIN ENTRANCE (stylistic details)
PORCHES: #open ___ #closed ___ #incised ___ Locations S/SHED - 1 STORY PORTICO -
Porch roof types 2 BAY, WEST ACCESS
EXTERIOR ORNAMENT

INTERIOR PLAN CONDITION: __excellent X good __fair __deteriorated __ruinous
SURROUNDINGS (N-None, S-Some, M-Most, A-All or nearly all) __commercial A residential __institutional __rural
ANCILLARY FEATURES (No., type of outbuildings; major landscape features)

ARCHAEOLOGICAL REMAINS AT SITE Archaeological form completed? _y _n (No-explain; yes-attach!)
Artifacts or other remains
NARRATIVE (E.g. description of interior, landscape, architecture, etc; please limit to 3 lines and attach full statement on separate sheet)

HISTORICAL STRUCTURE FORM

Site #8 _____

HISTORY

CONSTRUCTION DATE 1926 CIRCA X yes __no
ARCHITECT: (last name first) UNKNOWN
BUILDER: (last name first) UNKNOWN
MOVES __yes X no Dates _____ Orig.addr. _____
ALTERATIONS __yes __no Dates _____ Nature _____
ADDITIONS __yes __no Dates _____ Nature _____
ORIGINAL USES (give dates) RESIDENCE
INTERMEDIATE USES (give dates) _____
PRESENT USES (give dates) RESIDENCE
OWNERSHIP HISTORY (especially original owner) WILLIAM S. ROSACO, JR. (ORIGINAL) RICHARD W. BUTNER (CURRENT)

SURVEYOR'S EVALUATION OF SITE

Potentially elig. for local designation? _yes _no _insuff. info
Individually elig. for Nat. Register? _yes _no _insuff. info
Potential contributor to NR district? _yes _no _insuff. info

Local Designation Category _____

HISTORICAL ASSOCIATIONS (ethnic heritage, etc.) _____

EXPLANATION OF EVALUATION (required; limit to three lines; attach full statement on separate sheet)

CROSS-REFERENCES

BIBLIOGRAPHIC REFERENCES (Author, date, title, publication information. If unpublished, give FSF Manuscript Number, or location where available) _____

PHOTOGRAPHS (REQUIRED) B&W print(s) at least 3 x 5, at least one main facade. Label the back of the print with the FSF site number (site name if not available), direction and date of photograph: use pencil. Attach to back of the second to last page with a plastic or coated clip. Location of negatives/neg. nos. R21, F9-10

RECORDER

NAME (last first)/ADDR/PHONE/AFFILIATION HPPB

FOR DETAILED INSTRUCTIONS: *Guide to the 1992 Historic Structure Form of the Florida Site File.*

DHR USE ONLY — OFFICIAL EVALUATIONS — DHR USE ONLY

NR DATE	KEEPER NR ELIGIBILITY*: y n pe ui	Date
DELIST DATE	SHPO-NR ELIGIBILITY*: y n pe ui	Date
	LOCAL DESIGNATION*: _____	Date
	Local office _____	

* y=Yes; n=No; pe=Potentially Eligible; ui=Insufficient Information

REQUIRED:
(1) USGS MAP WITH STRUCTURE PINPOINTED
(2) LARGE SCALE STREET OR PLAT MAP
(3) PHOTO OF MAIN FACADE, PREFER B&W, AT LEAST 3X5

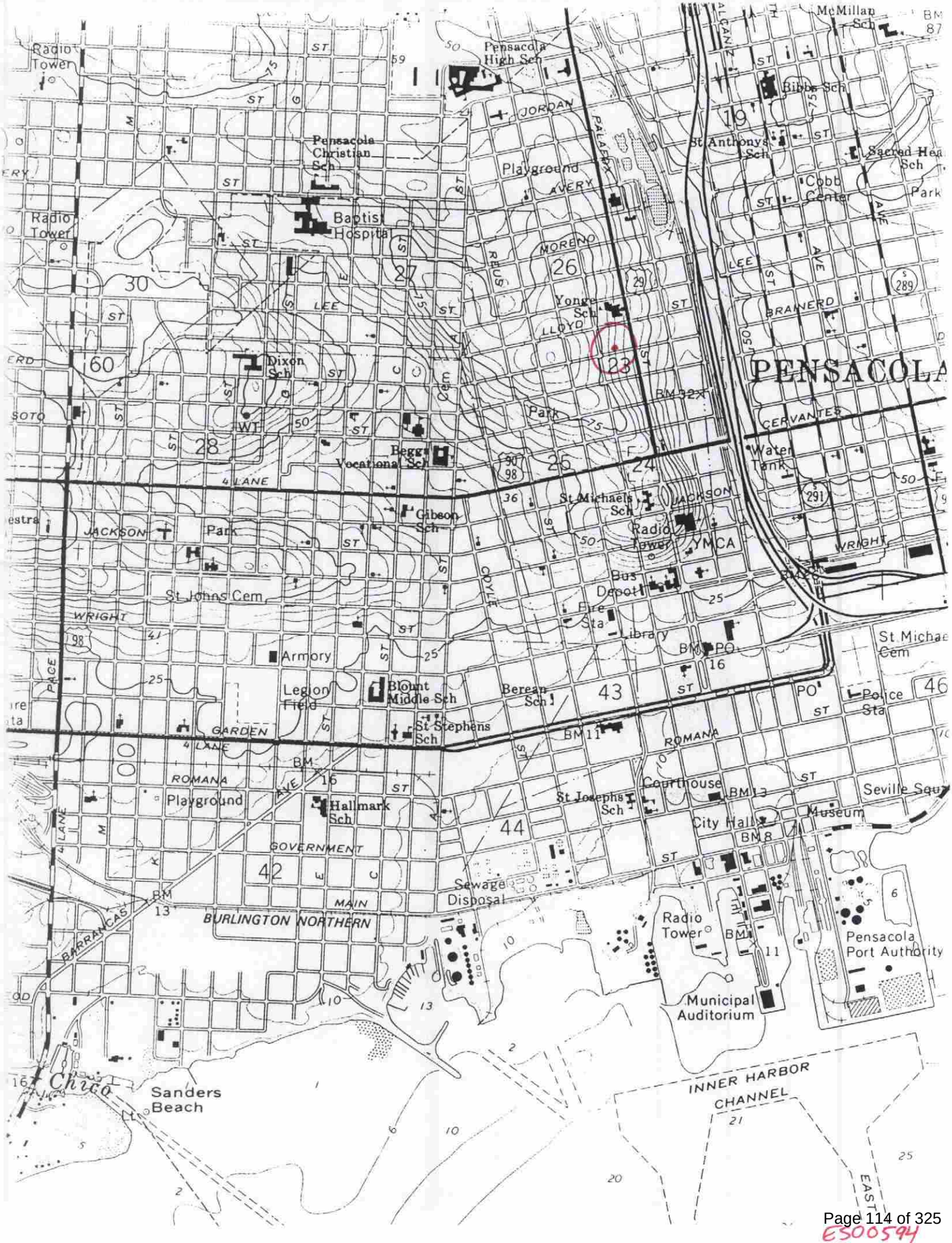

Radio Tower
Pensacola High Sch
McMillan Sch
Bibbs Sch
JORDAN
PALAFOX
St Anthonys Sch
Sacred Hea Sch
Pensacola Christian Sch
Playground
AVERY
Cobb Center
Park
Baptist Hospital
MORENO
REUS
LEE
Yonge Sch
LLOYD
BRAINERD
PENSACOLA
Dixon Sch
SOTO
Park
CERVANTES
Beggs Vocational Sch
Water Tank
4 LANE
St Michaels Sch
JACKSON
Gibson Sch
Park
Radio Tower
YMCA
WRIGHT
Bus Depot
St Johns Cem
Fire Sta
Library
Armory
St Michae Cem
Legion Field
Blount Middle Sch
Berean Sch
Police Sta
GARDEN
St Stephens Sch
ROMANA
Playground
Hallmark Sch
St Josephs Sch
Courthouse
Seville Squ
City Hall
Museum
GOVERNMENT
Sewage Disposal
MAIN
BURLINGTON NORTHERN
BARRANCAS
Radio Tower
Pensacola Port Authority
Municipal Auditorium
Chico
Sanders Beach
INNER HARBOR CHANNEL
EAST

ES00594

STATE OF FLORIDA
DEPARTMENT OF STATE
Division of Archives, History
and Records Management
Rev. 3/79

FLORIDA MASTER SITE FILE
Site Inventory Form

FDAHRM 802 = =
1009 = =

Site No. ES 594

Site Name Rosasco, W. S., Jr. House 830 = = Survey Date 8005 820 = =
Address of Site: 50 W Brainerd Street, Pensacola, FL 32501 905 = =
Instruction for locating on N side of W Brainerd St between N Palafox St and N Baylen St 813 = =
Location: Belmont Tract (subdivision name) 63 (block no.) port. 1-5 (lot no.) 868 = =
County: Escambia 808 = =
Owner of Site: Name: Crowell, Joseph and Francis
Address: 50 W Brainerd St.
Pensacola, FL 32501 902 = =
Type of Ownership Private 848 = = Recording Date 832 = =
Recorder:
Name & Title: Gantzhorn, Alan; Guedez, Susan
Address: HPPB 818 = =

Condition of Site: Integrity of Site: Original Use Residence 838 = =

Check One		Check One or More		Present Use Residence 850 = =
■ Excellent	863 = =	Altered	858 = =	Dates: Beginning +1946 844 = =
Good	863 = =	■ Unaltered	858 = =	Culture/Phase American 840 = =
Fair	863 = =	■ Original Site	858 = =	Period 20th century 845 = =
Deteriorated	863 = =	Restored ( ) (Date:)	( ) 858 = =	
		Moved ( ) (Date:)	( ) 858 = =	

NR Classification Category: District 916 = =

Threats to Site:

Check One or More			
Zoning ( )	( ) 878 = =	Transportation ( )	( ) 878 = =
Development ( )	( ) 878 = =	Fill ( )	( ) 878 = =
Deterioration ( )	( ) 878 = =	Dredge ( )	( ) 878 = =
Borrowing ( )	( ) 878 = =		
Other (See Remarks Below)	878 = =		

Areas of Significance: Architecture, History 910 = =

Significance:

An example fo Mediterranean Revival archictecture popular during the 1920's, this house was the home of William S. Rosasco, Jr., the manager of Rosasco Brothers, steamship agents. Rosasco was descended from a prominent lumber baron of the late 19th century.

SEE SITE FILE STAFF FOR ORIGINAL PHOTO(S) OR MAP(S)

911

ARCHITECT Unknown 872= =

BUILDER Unknown 874= =

STYLE AND/OR PERIOD Spanish Revival 964= =

PLAN TYPE Rectsngle 966= =

EXTERIOR FABRIC(S) Stucco 854= =

STRUCTURAL SYSTEM(S) Masonry 856= =

PORCHES S/ shed 1 story portico; 2 bay; access from S 942= =

FOUNDATION: slab ; concrete 942= =

ROOF TYPE: Gable 942= =

SECONDARY ROOF STRUCTURE(S): cross gable ; shed carport W 942= =

CHIMNEY LOCATION: Exterior S 942= =

WINDOW TYPE: Frehch, 10 light, wood # Fixed, 12 light,wood 942= =

CHIMNEY: brick; stuccoed 882= =

ROOF SURFACING: tile 882= =

ORNAMENT EXTERIOR: 882= =

NO. OF CHIMNEYS 1 952= = NO. OF STORIES 1 950= =

NO. OF DORMERS 0 954= =

Map Reference (incl. scale & date) USGS 7.5 Min Pensacola 1970
North Hill, Gordon Richmond, 1974 809= =

Latitude and Longitude:
° ' " ° ' " 800= =

Site Size (Approx. Acreage of Property): LT 1 833= =

LOCATION SKETCH OR MAP N

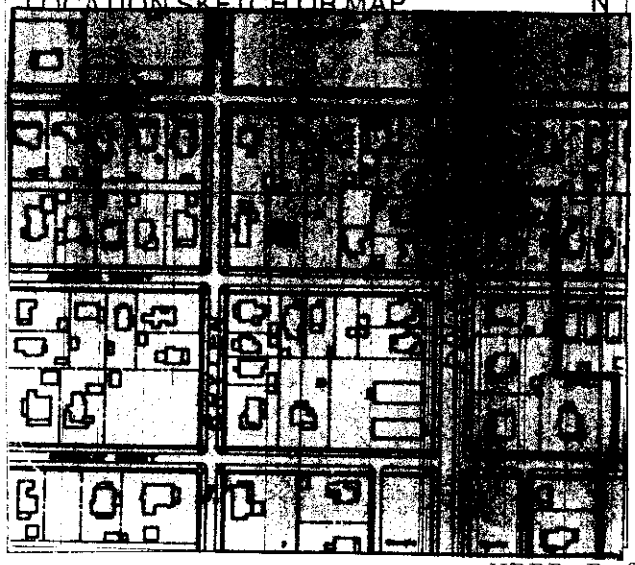

Township	Range	Section
2S	30W	19

812= =

UTM Coordinates:

890= =

Zone Easting Northing

Photographic Records Numbers HPPB P.80.13 Fr4A 860= =

Contact Print

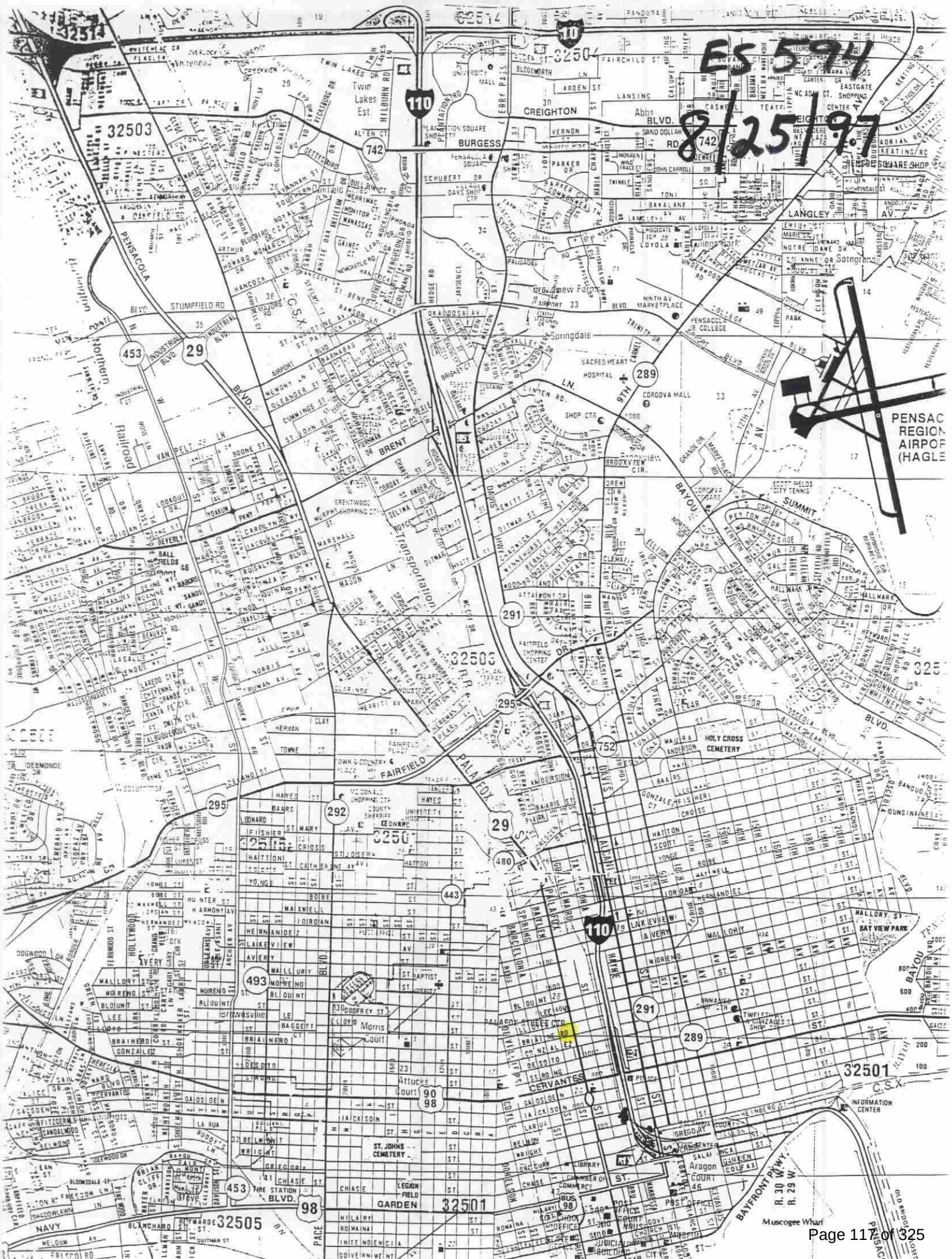
ES 594
8/25/97
32503
32504
32501
32505
CREIGHTON
BURGESS
LANGLEY
PENSACOLA
STUMPFIELD RD
BRENT
Transportation
FAIRFIELD
PALAFOX
CERVANTES
GARDEN
HOLY CROSS CEMETERY
ST. JOHNS CEMETERY
BAYFRONT PKWY
Muscogee Wharf
INFORMATION CENTER
BAY VIEW PARK
PENSAC
REGION
AIRPOR
(HAGLE
Twin Lakes Est.
Springdale
SACRED HEART HOSPITAL
CORDOVA MALL
SUMMIT
BAYOU
Northern
Railroad
C.S.X.
R. 30 W.
R. 29 W.





50 W. Brainerd Street

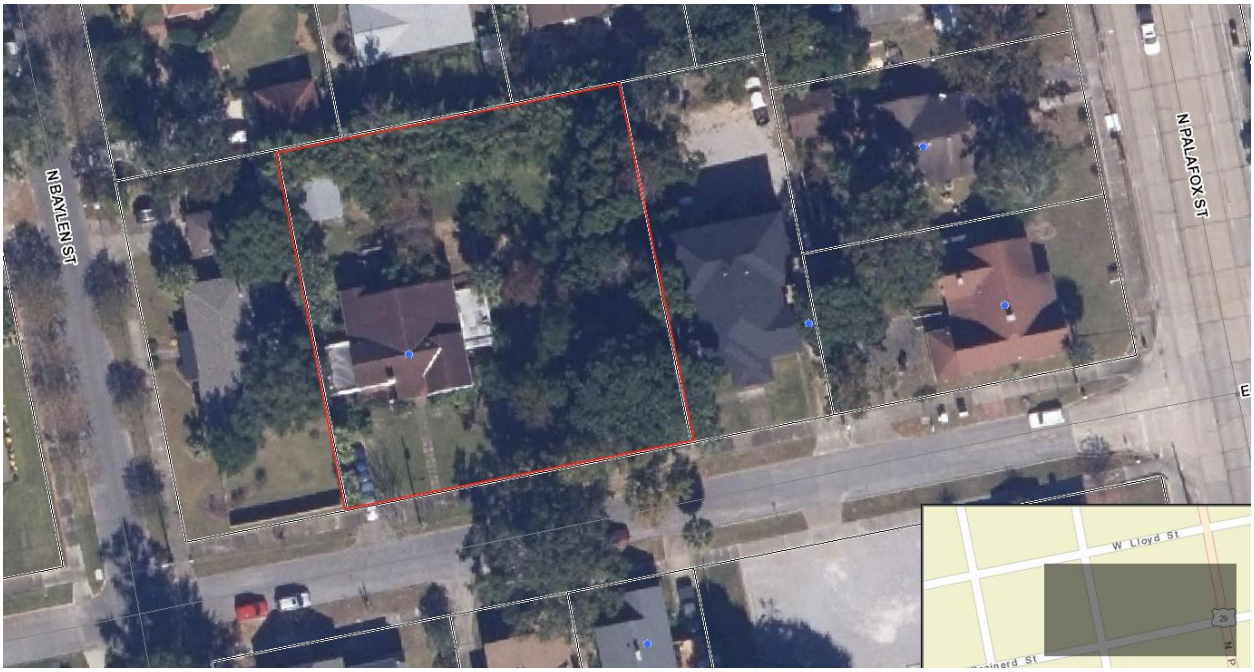



City of Pensacola
America's First Settlement And Most Historic City

Architectural Review Board Application
Full Board Review

Application Date: _____

Project Address: 50 W BRAINARD

Applicant: KEN TORRANCE

Applicant's Address: 50 W. BRAINARD

Email: KEN.TORRANCE@GMAIL.COM **Phone:** 832-797-1805

Property Owner: KEN TORRANCE
(If different from Applicant)

District: ☑ PHD ☒ NHPD ☐ OEHPD ☐ PHBD ☐ GCD

Application is hereby made for the project as described herein:

☑ Residential Homestead – $50.00 hearing fee

☐ Commercial/Other Residential – $250.00 hearing fee

** An application shall be scheduled to be heard once all required materials have been submitted and it is deemed complete by the Secretary to the Board. You will need to include eight (8) copies of the required information. Please see pages 3 – 4 of this application for further instruction and information.*

Project specifics/description:

A. REPLACE SUN ROOM WINDOW
B. REPLACE DOOR TO EAST DECK TEMPORARILY
C. REPLACE MASTER BED ROOM DOOR
D REPLACE "EXTRA ROOM" DOOR
E REPLACE DECK
F REPLACE DECK

I, the undersigned applicant, understand that payment of these fees does not entitle me to approval and that no refund of these fees will be made. I have reviewed the applicable zoning requirements and understand that I must be present on the date of the Architectural Review Board meeting.

Applicant Signature

29 FEB 2024
Date

Planning Services
222 W. Main Street * Pensacola, Florida 32502
(850) 435-1670
Mail to: P.O. Box 12910 * Pensacola, Florida 32521

Description of proposals:

The replacements proposed were installed so that the house could be moved into. All are loosely installed so that replacement will be easy if necessary.

A. Window on what is an existing addition, originally a porch, facing east near the rear of the house does not have external SDLs and we propose adding SDLs.
B. This door was installed just to secure the house. We propose leaving this door while we search for a door to match the Spanish revival style.
C. As installed with proposed hardware.
D. We propose this door to be painted white, matching the nearby window and installing SDLs made by the craftsman redoing the windows out of wood. We would also like to discuss options for what can be done in the future with the windows at the other end of the room. This room was originally a carport.
E. Propose rebuilding wood deck with same size deck.
F. Propose rebuilding wood deck with same size deck.

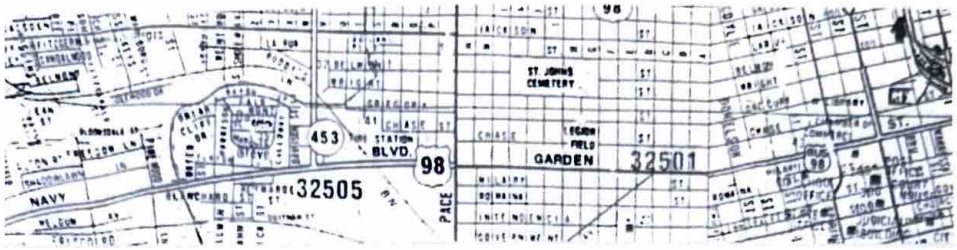
ST. JOHNS CEMETERY
453
BLVD.
98
GARDEN
32501
32505
NAVY
PACE





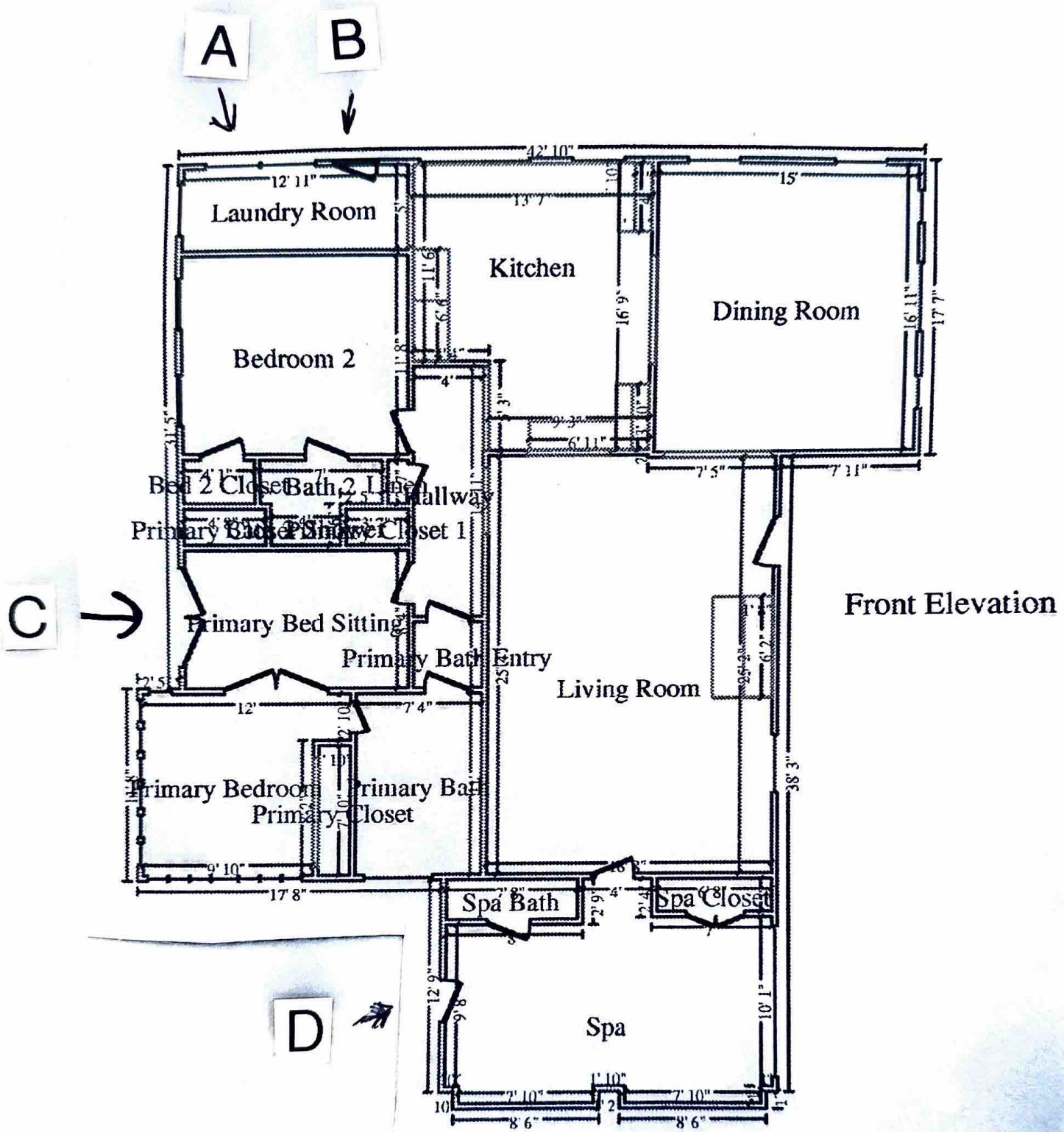
A
B
C
D
Laundry Room
Kitchen
Dining Room
Bedroom 2
Bed 2 Closet
Bath 2 Linen
Hallway
Primary Bath
Shower
Closet 1
Primary Bed Sitting
Primary Bath Entry
Living Room
Primary Bedroom
Primary Bath
Primary Closet
Spa Bath
Spa Closet
Spa
Front Elevation

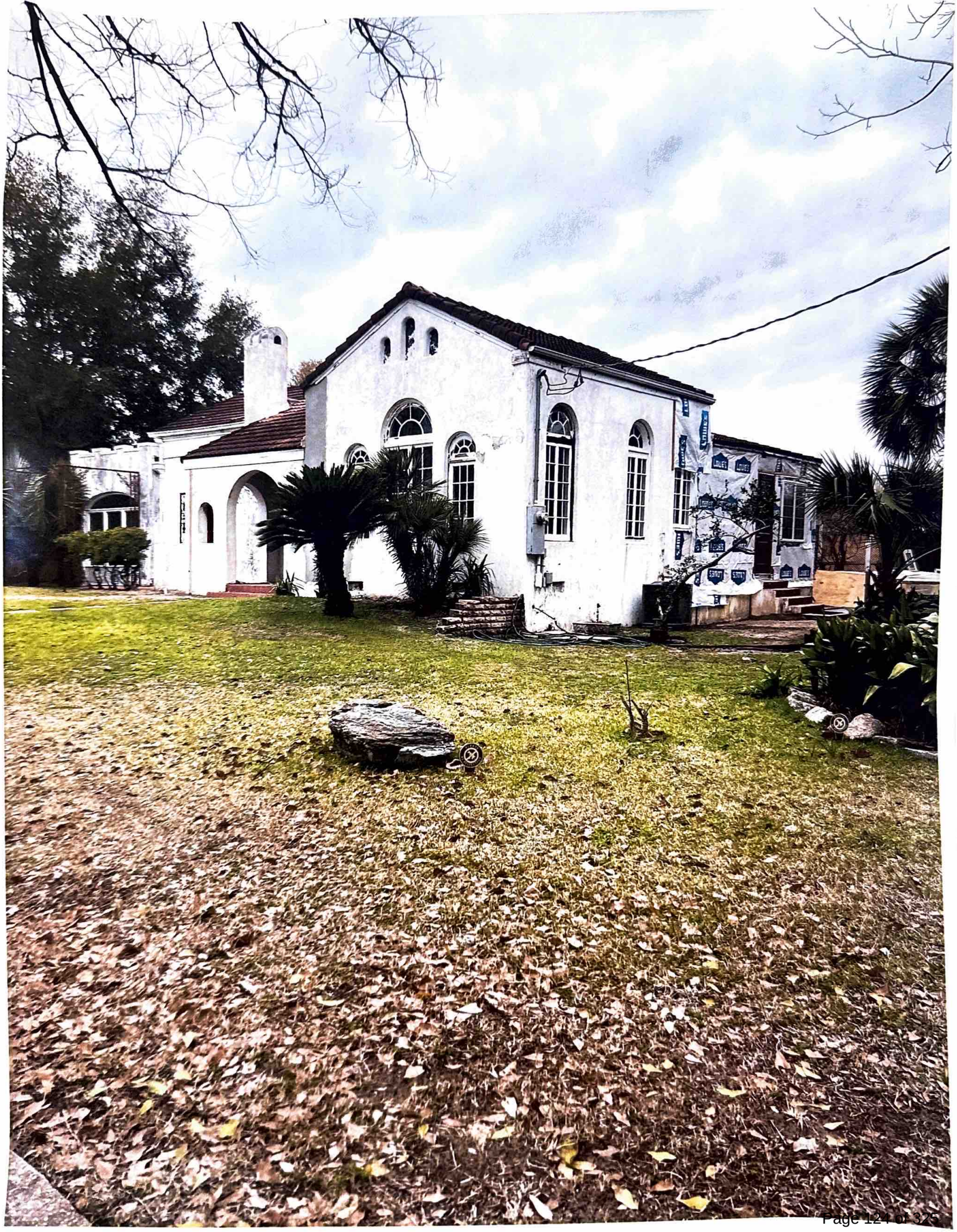






B
A


A
WINDOW WRAP
ESR - 2514

ANDERSEN WINDOWS & DOORS

400 SERIES CASEMENT WINDOW

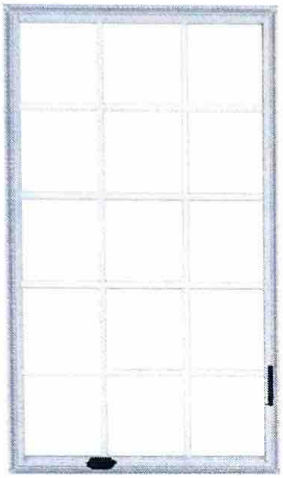

Interior

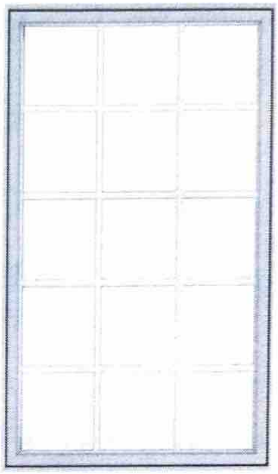

Exterior

Summary

Product ID#	CXW15
Unit Width	35 15/16"
Unit Height	59 7/8"
Interior Color	White
Glass	Dual-Pane Glass
Profile Style	Traditional
Hardware	Traditional Folding, Oil Rubbed Bronze
Grille Pattern	Colonial
Grille Width	7/8"
Exterior Color	White
Exterior Trim Profile	None

Feedback

WINDOW HARDWARE

Window hardware* enhances the overall design of a window and harmonizes with a home's décor. That's why we offer a broad range of hardware styles and finishes.

HARDWARE FINISHES

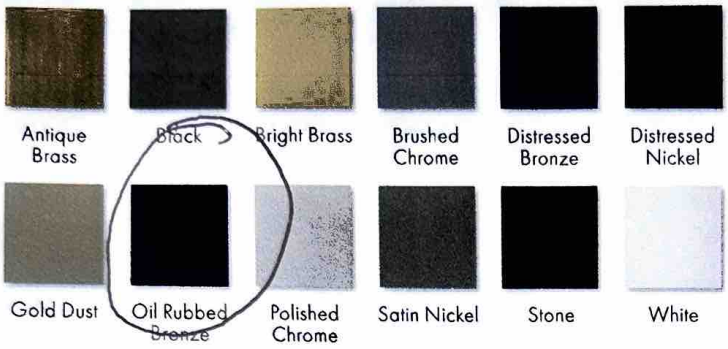

*Hardware is sold separately, except standard lock and keeper for double-hung windows.
Printing limitations prevent exact replication of finishes. See your Andersen supplier for actual finish samples.
Distressed bronze and oil rubbed bronze are "living" finishes that will change with time and use.







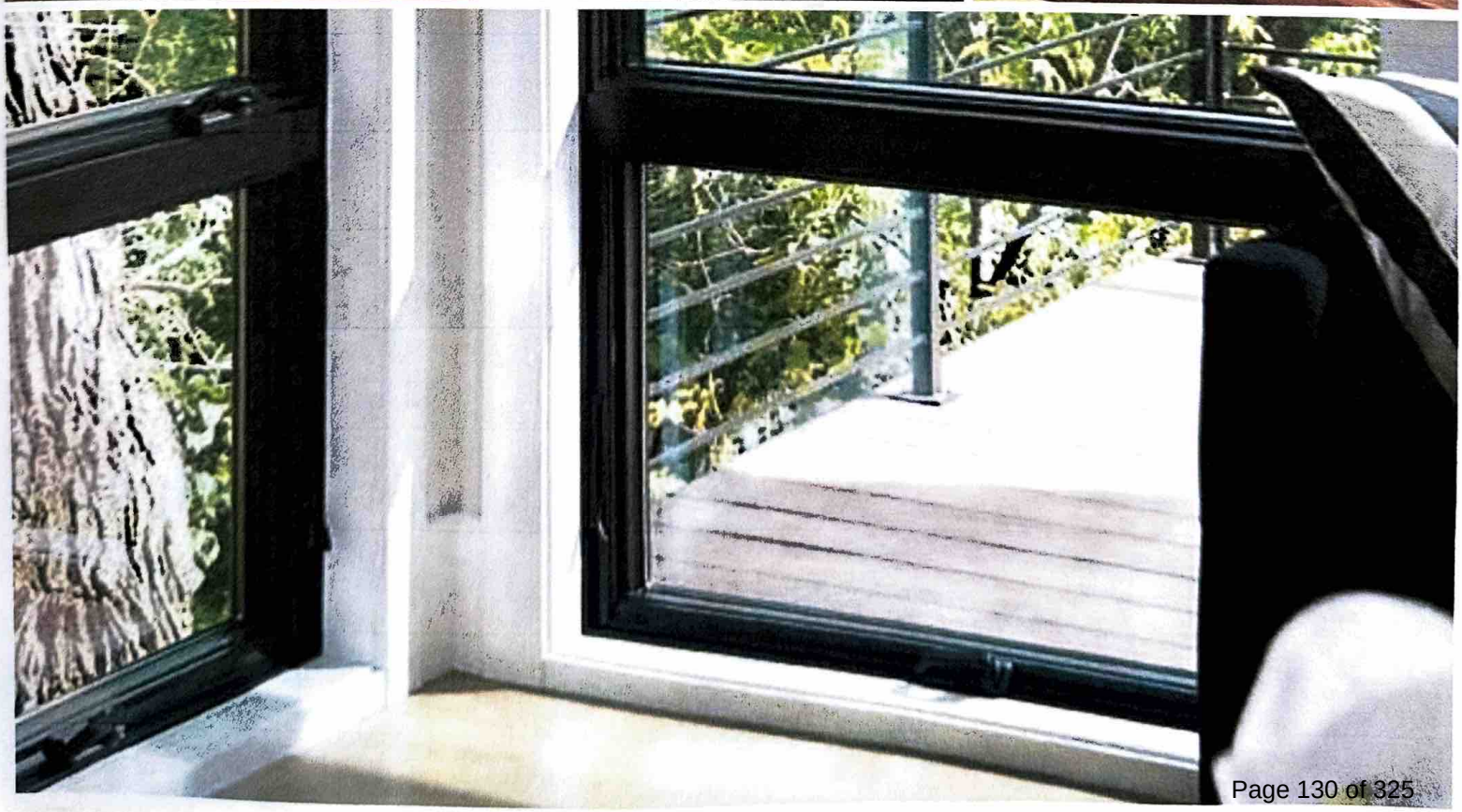

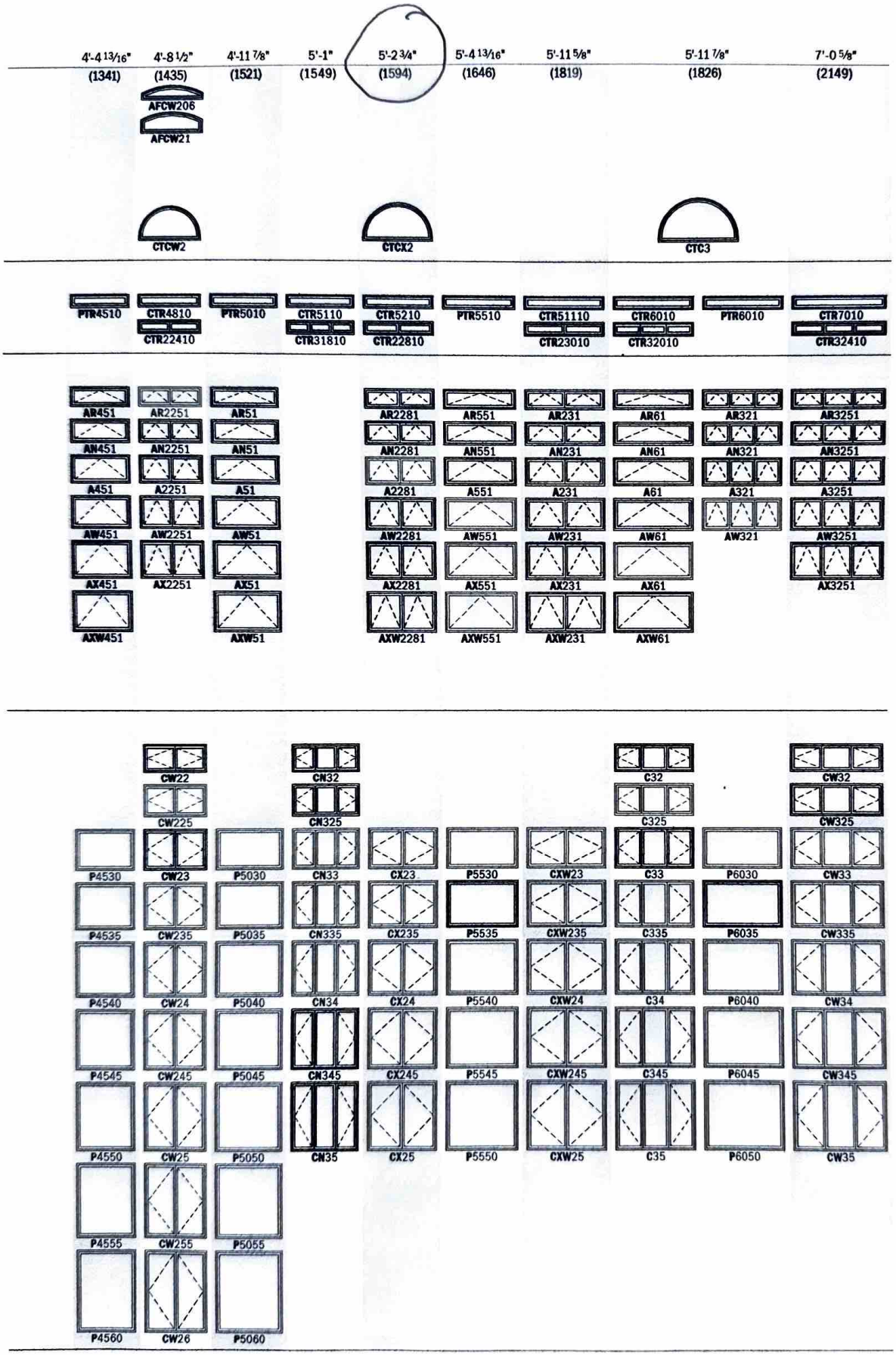

Similar jamb profiles enable these standard-size windows to be combined in multiple combinations. Custom-size windows are also available.

Window widths and heights shown. See individual size charts for additional dimensions.

In addition to venting configurations shown, other standard configurations are available.

• Dimensions in parentheses are in millimeters.

5'-2 3/4" (1594)	5'-11 5/8" (1819)	5'-1" (1549)	5'-11 7/8" (1826)	7'-0 5/8" (2149)
5'-3 1/4" (1607)	6'-0 1/8" (1832)	5'-1 1/2" (1562)	6'-0 3/8" (1838)	7'-1 1/8" (2162)
27 1/8" (689)	31 9/16" (802)	16 1/8" (410)	19 3/4" (502)	24" (610)
57 15/16" (1472)	66 13/16" (1697)	56 3/16" (1427)	67 1/16" (1703)	79 13/16" (2027)

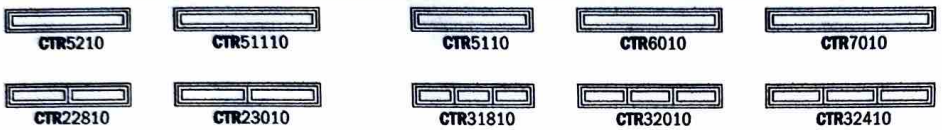

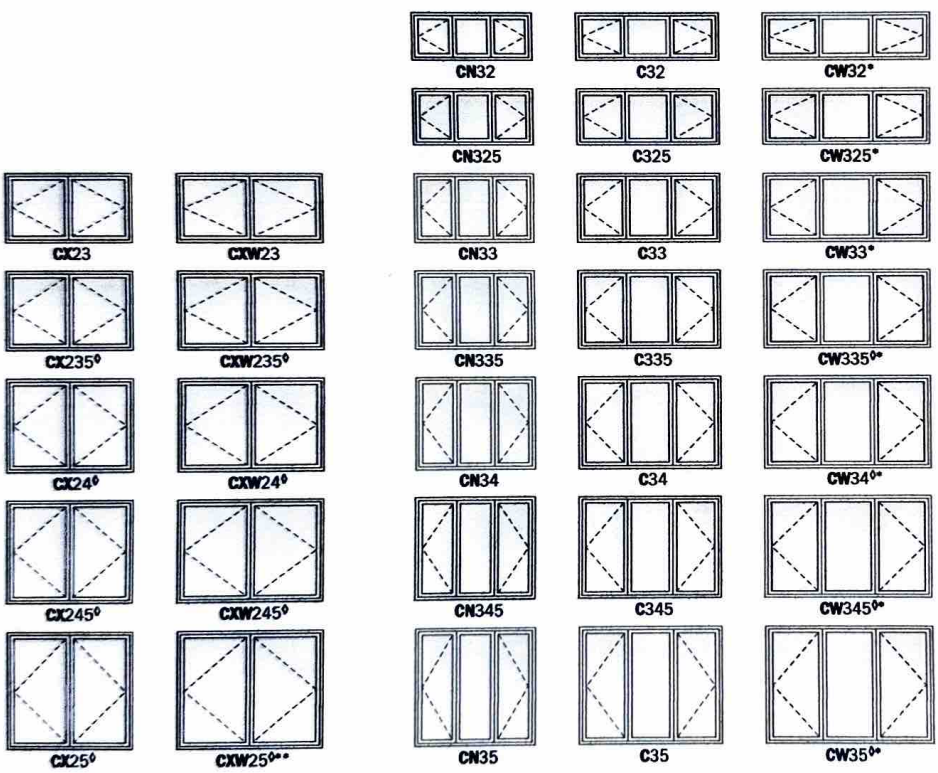



Custom-size windows are available in 1/8" (3) increments. Windows can also be custom sized to match standard sizes ending in a sixteenth of an inch. **Single windows only.** See page 33 for custom sizes and specifications.

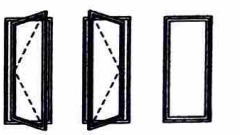

Left Right Stationary

Choose left, right or stationary as viewed from the exterior. In addition to venting shown in table, other standard configurations are available for single, twin and triple windows. Transom (**CTR**) windows are stationary only.

Twin and triple windows shown have one continuous outer frame.

Transom (CTR) windows can be used over casement or awning windows, and may be rotated 90° and used as a sidelight with casement, awning or picture windows.

Grille patterns shown on page 34.

- "Window Dimension" always refers to outside frame-to-frame dimension.
- **"Minimum Rough Opening" dimensions may need to be increased to allow for use of building wraps, flashing, sill panning, brackets, fasteners or other items. See pages 210-211 for more details.**
- Dimensions in parentheses are in millimeters.

◊Meet or exceed clear opening area of 5.7 sq. ft. or 0.53 m², clear opening width of 20" (508) and clear opening height of 24" (610) with appropriate hinge specified. See tables on pages 29-30.
*Meet clear opening width of 20" (508) using hinge with wash mode and control bracket (bracket can be pivoted for cleaning position) and meet clear opening width of 22" (559) using hinge for widest clear opening.
**Available with straight-arm operators (hinged for widest clear opening) only.

ACCESSORIES Sold Separately

FRAME

Extension Jambs

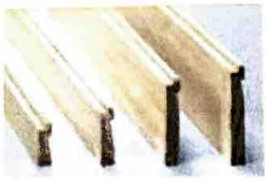

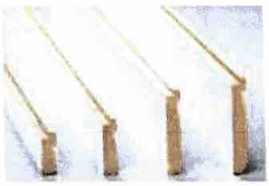

Standard jamb depth is 2⅞" (73). Extension jambs are available in unfinished pine or prefinished white, dark bronze and black. Some sizes may be veneered.

Factory-applied and non-applied interior extension jambs are available in 1/16" (1.5) increments between 4 9/16" (116) and 7 1/8" (181). Extension jambs can be factory applied to either three sides (stool and apron application) or four sides (picture frame casing).

Thick Replacement Extension Jambs

To help preserve original alignment of trim and paint lines in replacement situations, special 1⅛" (29) thick replacement extension jambs are available. Factory-applied and non-applied extension jambs are available in 1/16" (1.5) increments between 4 9/16" (116) and 7 1/8" (181). Non-applied extension jambs are available in 12' (3658) lineals. Detail on page 34.

Drywall Return Bead



A drywall return bead is available in a narrow or wide dimension with unfinished pine or prefinished white, dark bronze and black interiors. Can be ordered factory applied or in non-applied lineals. Detail on page 34.

HARDWARE

Corrosion-Resistant Components



Corrosion-resistant hinge and operator arm hardware is designed for applications in harsh and corrosive environments such as heavy industrial or coastal areas.*

Window Opening Control Device



A window opening control device is available, which limits sash travel to less than 4" (102) when the window is first opened. Available factory applied, or as a field-applied kit in white, stone and black.

Power Operator for Awning Windows



Awning windows can be ordered with an operator enhanced by PowerAssist™ technology that opens and closes the window with the touch of a button. Easy to install, the 24-volt system features a concealed window power drive, battery backup in case of a power outage and a moisture sensor that automatically closes the window when it rains. A wireless remote control is available (sold separately).

The PowerAssist system is controlled by a wall-mounted console, which includes a power box, battery, touch pad and mounting bracket. Windows can be ordered factory prepped to save time, or they can be ordered as a field kit. Power driver requires field installation. PowerAssist technology eliminates the need for sash locks. Available for windows up to 5' (1524) wide. Not available for units with Stormwatch® Protection or performance upgrades.

SPECIAL USE OPERATOR HANDLES

Available in Classic Series™ design only.

Compact Operator Handle



Specially designed for use in situations where blinds or other window treatments interfere with standard operator handle. Available in white or stone finish.

Easy-Grip Handle

Larger knob makes it easier to grip and operate. Available in white or stone finish.



Operator Spline Cover



An operator spline cover is an attractive cap that covers the roto operator stud when the handle has been removed to control access or operation of the window. The operator spline cover should not be used on any window designated or intended for emergency escape or rescue. Please consult your local building code official for local egress code requirements.

Metal T-Handle



Our smallest operator handle, the metal T-handle, may make it more difficult for young children (5 and under) to open the window. For more information on child safety, write:

Andersen Corporation
LookOut For Kids® Program
100 Fourth Avenue North
Bayport, MN 55003
Call **800-313-8889** or email
lofk@andersencorp.com.

GLASS

Andersen® Art Glass

Andersen art glass panels come in a variety of original patterns. See art glass section starting on page 173 for more information or visit **andersenwindows.com/artglass**.

INSECT SCREENS

TruScene® Insect Screens

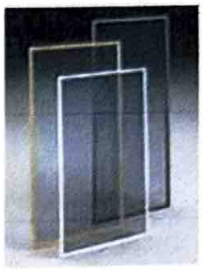

Andersen TruScene insect screens let in over 25% more fresh air** and provide 50% greater clarity than conventional Andersen insect screens, all while keeping out unwanted small insects. For casement and awning windows, frames are available in white, stone, dark bronze and black, or with pine veneer frame interiors to blend with the wood interior of the window.

Conventional Insect Screens

Conventional insect screens have charcoal powder-coated aluminum screen mesh. Available with frames in white, stone, dark bronze and black.

GRILLES

Grilles are available in a variety of configurations and widths. For casement and awning window grille patterns, see page 34.

EXTERIOR TRIM

Available with Andersen exterior trim. See exterior trim section starting on page 175.

CAUTION:

- Painting and staining may cause damage to rigid vinyl.
- 400 Series windows in Terratone color may be painted any color lighter than Terratone color using quality oil-based or latex paint.
- Do not paint 400 Series windows in white, canvas, Sandtone, dark bronze, forest green or black exterior colors.
- Andersen does not warrant the adhesion or performance of homeowner-applied paint over vinyl or other factory-coated surfaces.
- For vinyl painting instructions and preparation, contact your Andersen supplier.
- Do not paint weatherstrip.
- Creosote-based stains should not come in contact with Andersen products.
- Abrasive cleaners or solutions containing corrosive solvents should not be used on Andersen products.

*Visit andersenwindows.com/warranty for details.

**TruScene insect screens let in over 25% more fresh air than standard Andersen fiberglass insect screens.

Dimensions in parentheses are in millimeters.

Casement & Awning Windows



CONTEMPORARY FOLDING

Black | Bright Brass | Gold Dust | Oil Rubbed Bronze
Satin Nickel | Stone | White



TRADITIONAL FOLDING

Antique Brass | Black | Bright Brass | **Distressed Bronze**
Distressed Nickel | Gold Dust | Oil Rubbed Bronze
Satin Nickel | Stone | White



CLASSIC SERIES™

Stone | **White**



ESTATE™

Antique Brass | Bright Brass | Brushed Chrome
Distressed Bronze | Distressed Nickel | Oil Rubbed Bronze
Polished Chrome | Satin Nickel

Folding handles avoid interference with window treatments.

Gliding Windows



Antique Brass | Black | Bright Brass
Brushed Chrome | Distressed Bronze
Distressed Nickel | Oil Rubbed Bronze
Polished Chrome | Satin Nickel
Stone | White

Bold name denotes finish shown.

Woodwright® Double-Hung Windows



Standard Lock & Keeper

Antique Brass | **Black** | Bright Brass | Brushed Chrome | Distressed Bronze
Distressed Nickel | Gold Dust | Oil Rubbed Bronze | Polished Chrome
Satin Nickel | Stone | White

Tilt-Wash Double-Hung Windows



Standard Lock & Keeper

Black | **Gold Dust** | Stone | White

Stone is standard with natural interior units.
White comes with prefinished white interiors.
Other finishes optional.



Optional Lock & Keeper

ESTATE™

Antique Brass | **Bright Brass**
Brushed Chrome | Distressed Bronze
Distressed Nickel | Oil Rubbed Bronze
Polished Chrome | Satin Nickel

Optional Estate lock and keeper is available only for 400 Series tilt-wash double-hung windows. Estate lock and keeper reduces the clear opening height by 19/32" (15). Check with local building code officials to determine compliance with egress requirements.
Optional sash lifts shown on page 48 for Woodwright windows and page 76 for tilt-wash windows.

Hardware is sold separately, except standard lock and keeper for double-hung windows.
Dimensions in parentheses are in millimeters.
Printing limitations prevent exact replication of finishes. See your Andersen supplier for actual finish samples.
Distressed bronze and oil rubbed bronze are "living" finishes that will change with time and use.

GLASS OPTIONS

Andersen has the glass you need to get the performance you want. From SmartSun™ glass with HeatLock® coating that's ENERGY STAR® certified in all climate zones* to PassiveSun® glass that helps heat homes in northern areas, there's an option for every climate, project and customer. Check with your supplier for selections that meet ENERGY STAR requirements in your area.

GLASS		ENERGY		LIGHT	
		U-Factor How well a product prevents heat from escaping.	Solar Heat Gain Coefficient How well a product blocks heat caused by sunlight.	Visible Light Transmittance How much visible light comes through a product.	UV Protection How well a product blocks ultraviolet rays.
Low-E4®	Outstanding overall performance for climates where both heating and cooling costs are a concern.	●●●○	●●●○	●●●○	●●●○
Low-E4 with HeatLock® Coating	Applied to the room-side surface, it reflects heat back into the home and improves U-Factor values.	●●●◐	●●●○	●●◐○	●●●○
SmartSun™	Thermal control similar to tinted glass, with visible light transmittance similar to Low-E4 glass.	●●●○	●●●●	●●◐○	●●●●
SmartSun with HeatLock Coating	Applied to the room-side surface, it reflects heat back into the home and improves U-Factor values.	●●●◐	●●●●	●●○○	●●●●
Sun	Outstanding thermal control in southern climates where less solar heat gain is desired.	●●●○	●●●●	●○○○	●●●○
PassiveSun®	Ideal for northern, passive solar construction applications where solar heat gain is desired.	●●◐○	●○○○	●●●○	●●●○
PassiveSun with HeatLock Coating	Applied to the room-side surface, it reflects heat back into the home and improves U-Factor values.	●●●○	●○○○	●●◐○	●●●○
Clear Dual-Pane	High visibility with basic thermal performance.	●○○○	○○○○	●●●●	○○○○

Center of glass performance only. Ratings based on glass options as of May 2021. Visit andersenwindows.com/energystar for ENERGY STAR map and NFRC total unit performance data.

HEATLOCK TECHNOLOGY

Applied to the room-side glass surface, HeatLock coating reflects heat back into the home for improved performance.

STORMWATCH® PROTECTION

Most Andersen 400 Series windows are available with impact-resistant glass and structural upgrades to meet the tough building codes of hurricane-prone coastal areas. See your local code official for specific requirements.

StormWATCH PROTECTION

ADDITIONAL GLASS OPTIONS

Tempered safety glass is standard on patio doors and required for larger window sizes.

Laminated glass is available for added strength, enhanced security and sound control.

Patterned glass lets in light while obscuring vision and adds a unique, decorative touch. Cascade and Reed patterns can be ordered with either a vertical or horizontal orientation.

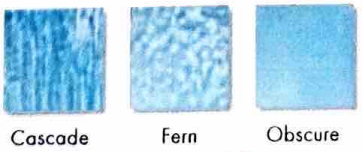

Cascade | Fern | Obscure

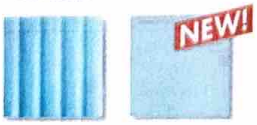

Reed | Satin Etch

ART GLASS

With art glass panels from Andersen, you can add interest, create focal points and make your work stand out. See page 173 or visit **andersenwindows.com/artglass** for more information.

TIME-SAVING FILM

We protect our products during delivery and construction with translucent film on the glass that peels away for a virtually spotless window.

For more details on our glass options, visit **andersenwindows.com/glass**.

ASK ABOUT ENERGY STAR

*Andersen 400 Series products only with SmartSun glass with HeatLock coating (argon gas blend), no grilles, no capillary breather tubes. Excludes patterned/textured glass.

"ENERGY STAR" is a registered trademark of the U.S. Environmental Protection Agency.


B
LOWE'S
ESR - 2514


C

400 SERIES FRENCHWOOD® HINGED PATIO DOOR

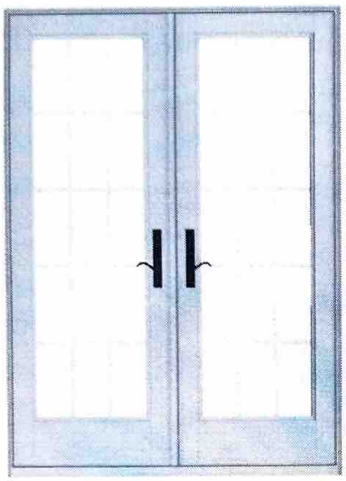

Interior

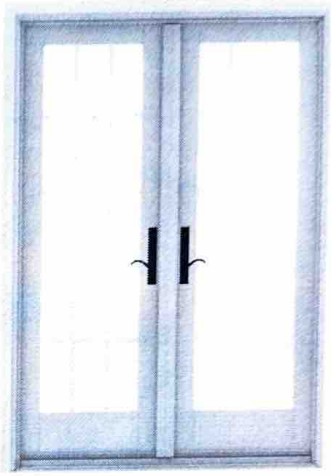

Exterior

Summary

Product ID#	FWH5068
Unit Width	59 1/4"
Unit Height	79 1/2"
Interior Color	White
Glass	Dual-Pane Glass
Hardware	Baldwin® 5455V, Oil Rubbed Bronze
Blinds Between Glass	None
Grille Pattern	Colonial
Grille Width	7/8"
Exterior Door Color	White
Exterior Trim Profile	2" Brick Mould

Feedback

FRENCHWOOD® HINGED INSWING PATIO DOORS

FEATURES

FRAME

Ⓐ The sill is made with three-piece construction. The subsill is made of Fibrex® material, and the sill step is solid oak. The exterior sill member is made of extruded aluminum with an attractive wear-resistant, heat-baked finish in neutral gray. This combination of materials combines durability and low maintenance with excellent insulating characteristics.

Ⓑ All basic exterior frame members are fiberglass reinforced composite, which maintains an attractive appearance while minimizing maintenance.

Ⓒ The exterior frame members are attached to a water-repellent preservative-treated wood subframe for long-lasting protection and performance. The subframe is grooved to accept extension jambs.

PANEL

Ⓓ Panel interior surfaces are unfinished pine veneer. Unfinished maple or oak veneers are available as options. Low-maintenance prefinished white interiors are also available.

Hinged inswing operating panels are left-hand active, right-hand active or two-panel active-passive jamb hinged.

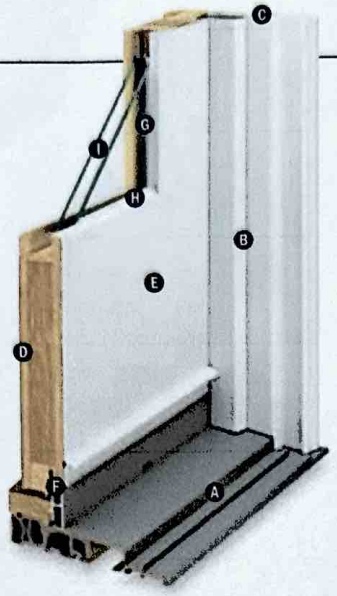

Ⓔ The exterior of the wood door panel is protected with a long-lasting urethane base finish available in white, Sandtone, Terratone and forest green.

Ⓕ A factory-applied, one-piece compression-type rubber weatherstrip continues in one plane around the panel to provide maximum effectiveness against water and air infiltration. Corners of the weatherstrip are welded to eliminate gaps between the panel and the frame/sill shoulder.

Mortise-and-Tenon Joints



Mortise and tenon joints prevent panel sag and maintain smooth operation.

GLASS

Ⓖ In addition to stainless steel glass spacers, black or white glass spacers are now available to allow the spacer to blend in with the unit color.

Ⓗ Panels are silicone bed glazed and finished with an interior wood stop.

Ⓘ High-Performance options include:

- Low-E4® tempered glass
- Low-E4 HeatLock® tempered glass
- Low-E4 SmartSun™ tempered glass
- Low-E4 SmartSun HeatLock tempered glass
- Low-E4 Sun tempered glass

Additional glass options are available. Contact your Andersen supplier.

A removable translucent film helps shield the glass from damage during delivery and construction, and simplifies finishing at the job site.

Patterned glass options are available. See page 12 for more details.

EXTERIOR & INTERIOR OPTIONS

EXTERIOR COLORS



White | Sandtone | Terratone | Forest Green

INTERIOR OPTIONS



Pine | Maple | Oak | White

Naturally occurring variations in grain, color and texture of wood make each window one of a kind. All wood interiors are unfinished unless a finish is specified. Printing limitations prevent exact replication of colors and finishes. See your Andersen supplier for actual color and finish samples.

HARDWARE OPTIONS Sold Separately

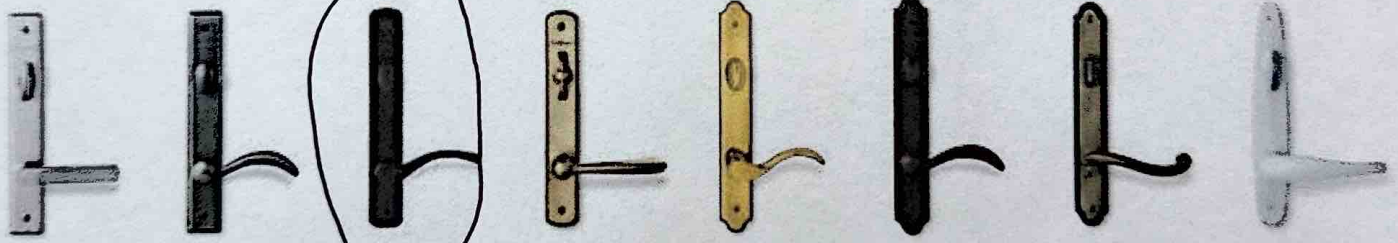

ANVERS®
Bright Brass
Oil Rubbed Bronze
Satin Nickel

YUMA®
Distressed Bronze
Distressed Nickel

NEWBURY®
Antique Brass
Bright Brass
Brushed Chrome
Oil Rubbed Bronze
Polished Chrome
Satin Nickel

ALBANY
Black
Gold Dust
Stone
White

COVINGTON™
Antique Brass
Bright Brass
Oil Rubbed Bronze

ENCINO®
Distressed Bronze
Distressed Nickel

WHITMORE®
Antique Brass
Bright Brass
Oil Rubbed Bronze
Satin Nickel

TRIBECA®
Black
Stone
White

Bold name denotes finish shown.

HARDWARE FINISHES



Antique Brass | Black | Bright Brass | Brushed Chrome | Distressed Bronze | Distressed Nickel

Gold Dust | Oil Rubbed Bronze | Polished Chrome | Satin Nickel | Stone | White

FSB® HARDWARE & FINISHES

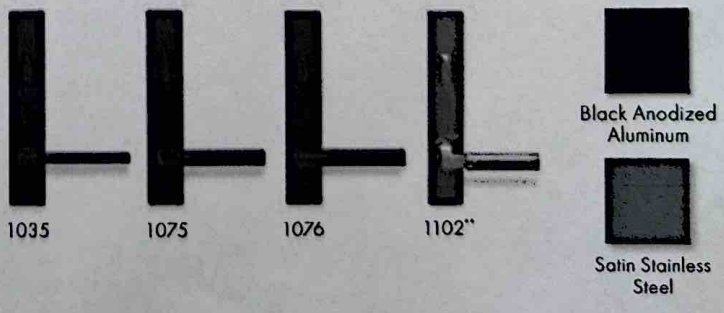

1035 | 1075 | 1076 | 1102**

Black Anodized Aluminum

Satin Stainless Steel

*Visit andersenwindows.com/warranty for details.
**FSB style 1102 is not available in black anodized aluminum.
"FSB" is a registered trademark of Franz Schneider Brakel GmbH & Co.
Matching hinges are available for inswing patio doors.

Mix-and-match interior and exterior style and finish options are available; excludes FSB hardware.
Bright brass and satin nickel finishes feature a 10-year limited warranty.
Tribeca and Albany hardware are zinc die cast with powder-coated durable finish. Other hardware is solid forged brass.
Distressed bronze and oil rubbed bronze are "living" finishes that will change with time and use.

Custom Sizes and Specification Formulas

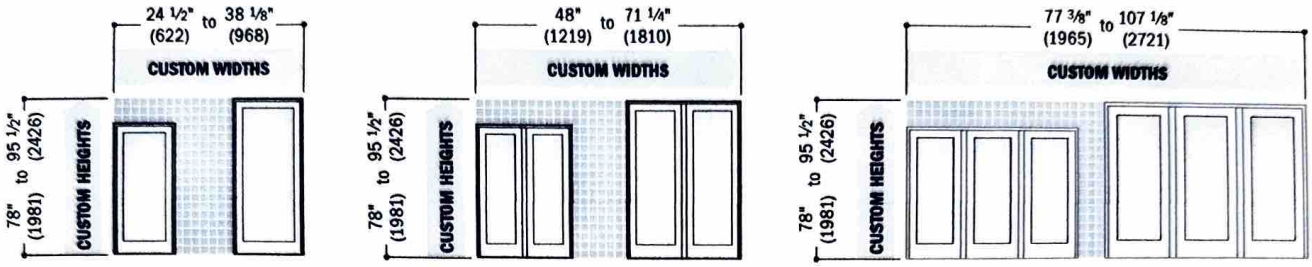

Clear Opening	Height = height − 4.22" (107) Single-Panel Width = width − 5.744" (145) Two-Panel, two panels open Width = width − 7.394" (187) Two-Panel, one panel open Width = (width − 10.550" (267)) ÷ 2 Three-Panel Width = (width − 16.106" (409)) ÷ 3	**Minimum R.O.**	Width = width + 3/4" (19) Height = height + 1/2" (13)	**Unobst. Glass**	Single-Panel Width = width − 11.22" (285) Height = height − 16.05" (408) Two-Panel Width = width − 21.5" (546) Height = height − 16.05" (408) Three-Panel Width = width − 32.55" (827) Height = height − 16.05" (408)

Available in 1/8" (3) increments between minimum and maximum widths and heights. Some restrictions apply. Measurement guide can be found at **andersenwindows.com/measure.**

- Clear opening width formulas are based on panel(s) in a 90° open position.
- Dimensions in parentheses are in millimeters.
- **Clear Opening** formulas provide dimensions for determining area available for egress. Vent opening, or area available for passage of air, is equal to clear opening. **Minimum R.O.** (minimum rough opening) formulas provide minimum rough opening width and height dimensions. **Unobst. Glass** (unobstructed glass) formulas provide dimensions for determining area available for passage of light.

Grille Patterns

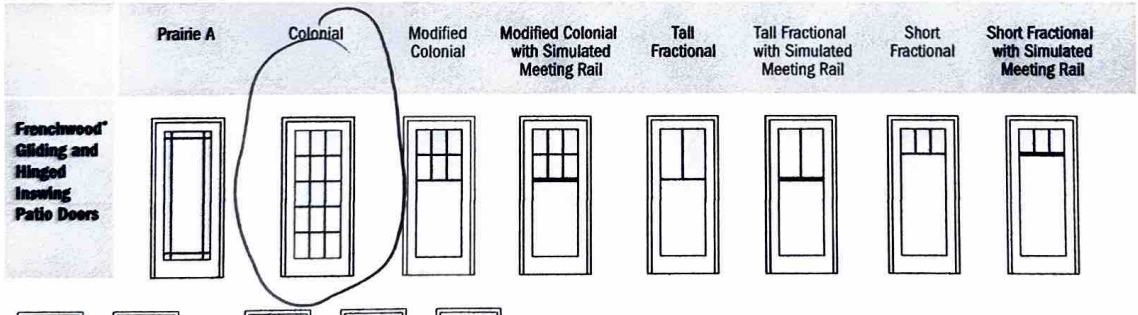

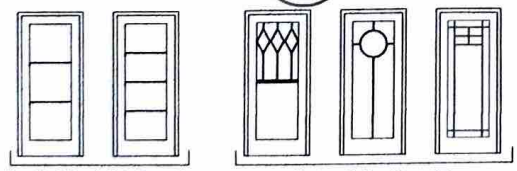

Specified Equal Light Examples

Custom Pattern Examples

Number of lights and overall pattern varies with panel size. Patterns not available in all configurations. Specified equal light and custom patterns are also available. For more grille options, see page 14 or visit **andersenwindows.com/grilles.**

Interior Extension Jambs

Use of interior extension jambs or drywall return will restrict panel operation on jamb-hinged patio doors. Jamb-hinged patio doors must be installed flush to the interior to achieve full panel operation.

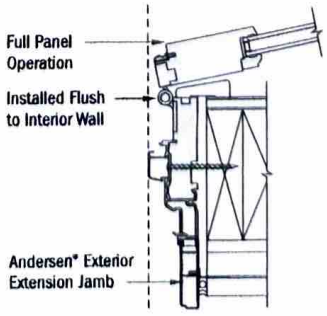

Jamb-Hinged Patio Door in 2 x 6 Wall without Interior Extension Jambs

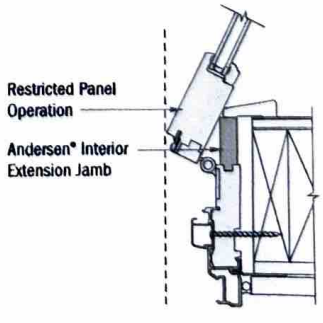

Jamb-Hinged Patio Door in 2 x 6 Wall with Interior Extension Jambs

ERGY STAR

U.S. / É.U.

nergystar.gov

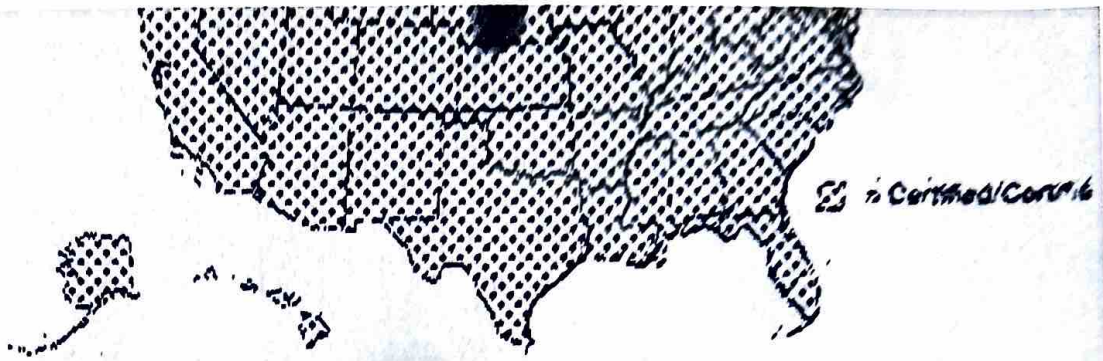

NOT REMOVE UNTIL FINAL INSPECTION/NE PA C ETIRER AVANT L'INSPECTION FINALE

NFRC

National Fenestration Rating Council®

CERTIFIED

ANDERSEN

WINDOWS & DOORS

Inswing Door

AND-N-75-00553-00001

Aluminum-Clad Wood Frame, Dual-Pane Low-E Tempered Glazing

Product Type: Swinging Door with Frame

ENERGY PERFORMANCE RATINGS

U-Factor		Solar Heat Gain Coefficient
0.30 (U.S./I-P)	1.70 (Metric/SI)	0.24

ADDITIONAL PERFORMANCE RATINGS

Visible Transmittance	
0.41	-

Manufacturer stipulates that these ratings conform to applicable NFRC procedures for determining whole product performance. NFRC ratings are determined for a fixed set of environmental conditions and a specific product size. NFRC does not recommend any product and does not warrant the suitability of any product for any specific use. Consult manufacturer's literature for other product performance information.

www.nfrc.org

WINDOW & DOOR MANUFACTURERS ASSOCIATION

WDMA

Licensee: 129-H-788


D


D
ANDERSEN
ESR - 2514

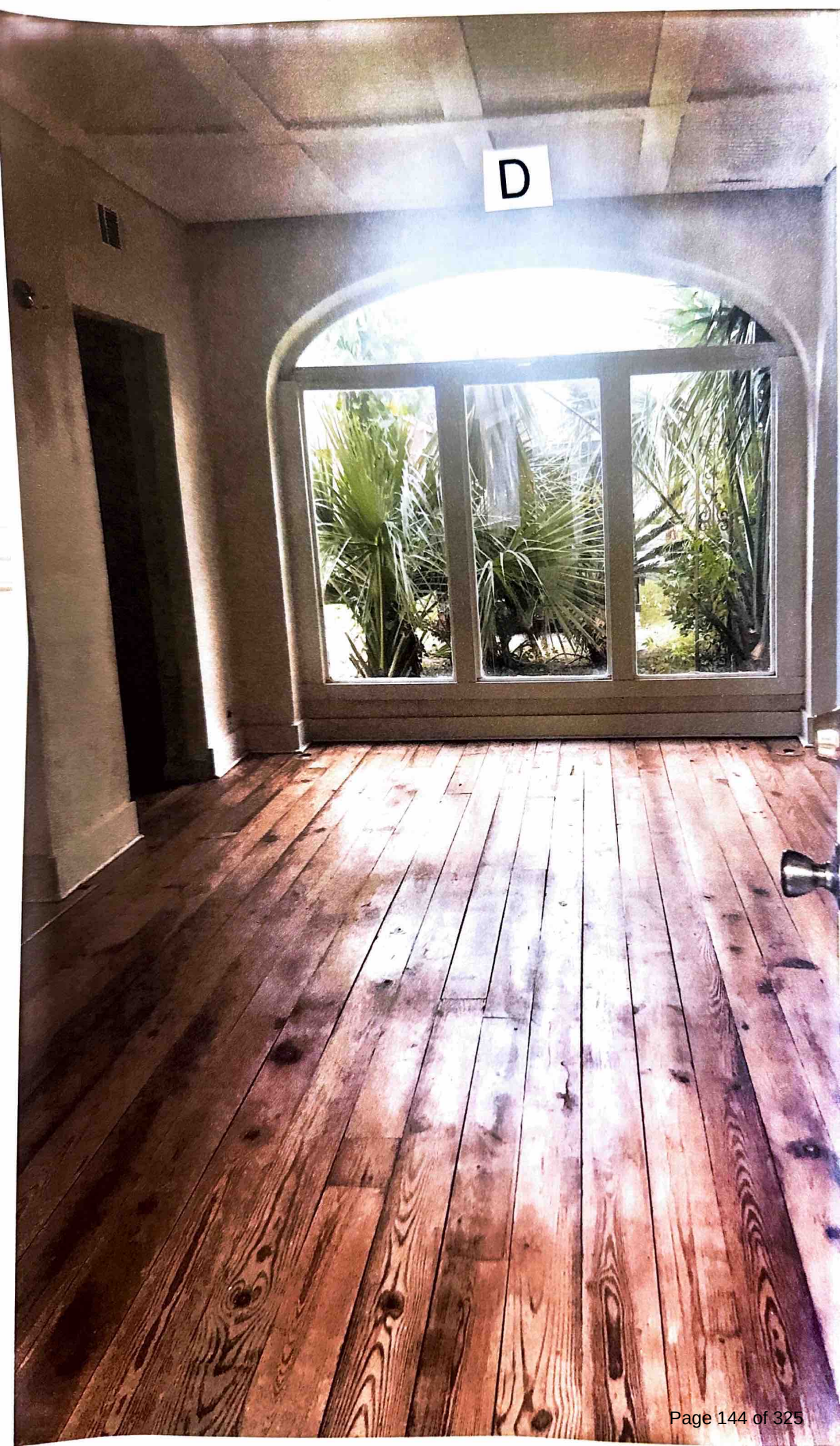
D

400 SERIES FRENCHWOOD® HINGED PATIO DOOR

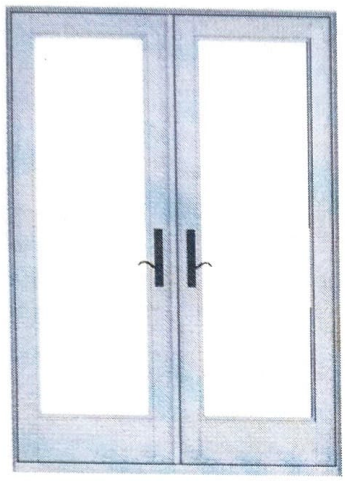

Interior

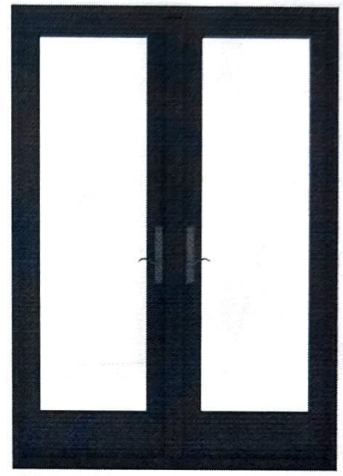

Exterior

Summary

Product ID#	FWH5068
Unit Width	59 1/4"
Unit Height	79 1/2"
Interior Color	White
Glass	Dual-Pane Glass
Hardware	Baldwin® 5455V, Non-Lacquered Brass
Blinds Between Glass	None
Grille Pattern	None
Exterior Door Color	Terratone
Exterior Trim Profile	None

Feedback

ANDERSEN™
WINDOWS & DOORS

GRILLE OPTIONS



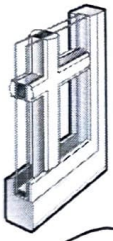

FULL DIVIDED LIGHT

For an authentic look, full divided light grilles are permanently applied to the interior and exterior of the window with a spacer bar between the glass.

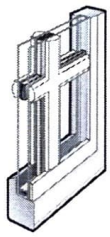

FULL DIVIDED LIGHT WITH ENERGY SPACER

Full Divided light with energy spacer has grilles that are permanently applied to the interior and exterior of the window. The narrow spacer bar minimizes transfer of heat and cold to the interior surface, improving the overall thermal performance. Products will have the same U-Factor, SHGC and visible transmission as they would with simulated divided light grilles.

Available on A-Series windows

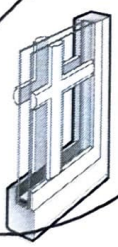

SIMULATED DIVIDED LIGHT

Simulated divided light offers permanently applied grilles on the exterior and interior with no spacer bar between the glass.

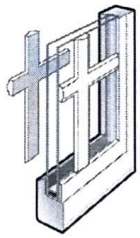

SIMULATED DIVIDED LIGHT WITH REMOVABLE INTERIOR GRILLES

Simulated divided light grilles have permanently applied grilles on the exterior and removable interior grilles for easy cleaning.

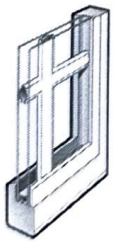

FINELIGHT™ GRILLES-BETWEEN-THE-GLASS

Finelight™ grilles-between-the-glass are located between the panes of glass making windows and doors easy to clean. With a sculpted profile and a two-sided color scheme, they match both the interior and exterior of the window or door.

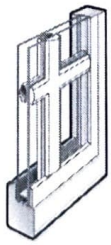

FINELIGHT™ GRILLES-BETWEEN-THE-GLASS WITH PERMANENT EXTERIOR GRILLES

Finelight™ grilles-between-the-glass are located between the panes of glass making windows and doors easier to clean. The permanent grilles on the exterior provide architectural style and detail.

Available on 100 Series products

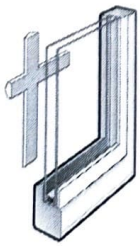

REMOVABLE INTERIOR GRILLES

Removable interior grilles are located on the room side glass surface and come off the glass for easy cleaning.

GRILLE COMPARISON CHART

GRILLE TYPE	PRODUCTS	EASE OF CLEANING	STYLE AUTHENTICITY
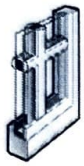 FULL DIVIDED LIGHT	E-Series A-Series 400 Series 100 Series Big Doors Entry Doors	● ○ ○ ○	● ● ● ●
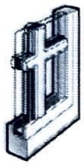 FULL DIVIDED LIGHT WITH ENERGY SPACER	A-Series*	● ○ ○ ○	● ● ● ●
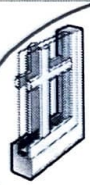 SIMULATED DIVIDED LIGHT	E-Series** A-Series 400 Series 200 Series 100 Series Big Doors** Entry Doors	● ○ ○ ○	● ● ● ○
 SIMULATED DIVIDED LIGHT WITH REMOVABLE INTERIOR GRILLES	A-Series 400 Series 200 Series Big Doors Entry Doors	● ● ○ ○	● ● ● ○
 FINELIGHT™ GRILLES-BETWEEN-THE-GLASS	E-Series A-Series 400 Series 200 Series 100 Series Big Doors Entry Doors	● ● ● ●	● ○ ○ ○
 FINELIGHT™ GRILLES-BETWEEN-THE-GLASS WITH EXTERIOR GRILLES	100 Series	● ● ○ ○	● ● ○ ○
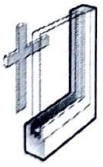 REMOVABLE INTERIOR GRILLES	E-Series A-Series 400 Series 200 Series Big Doors Entry Doors	● ● ● ○	● ○ ○ ○

ANDERSEN™ WINDOWS & DOORS

*A-Series windows only.
**Simulated divided light exterior only available.

"Andersen" and all other marks where denoted are trademarks of Andersen Corporation. ©2021 Andersen Corporation. All rights reserved. 09/21

FRENCHWOOD® HINGED INSWING PATIO DOORS

FEATURES

FRAME

Ⓐ The sill is made with three-piece construction. The subsill is made of Fibrex® material, and the sill step is solid oak. The exterior sill member is made of extruded aluminum with an attractive wear-resistant, heat-baked finish in neutral gray. This combination of materials combines durability and low maintenance with excellent insulating characteristics.

Ⓑ All basic exterior frame members are fiberglass reinforced composite, which maintains an attractive appearance while minimizing maintenance.

Ⓒ The exterior frame members are attached to a water-repellent preservative-treated wood subframe for long-lasting* protection and performance. The subframe is grooved to accept extension jambs.

PANEL

Ⓓ Panel interior surfaces are unfinished pine veneer. Unfinished maple or oak veneers are available as options. Low-maintenance prefinished white interiors are also available.

Hinged inswing operating panels are left-hand active, right-hand active or two-panel active-passive jamb hinged.

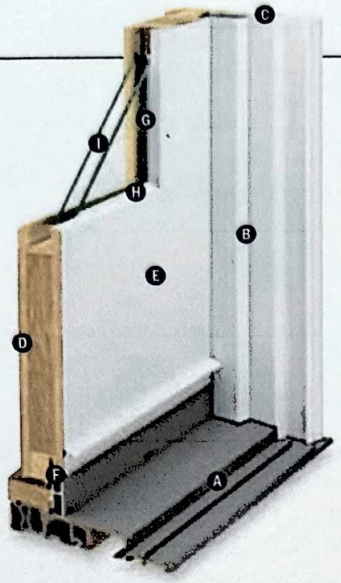

Ⓔ The exterior of the wood door panel is protected with a long-lasting* urethane base finish available in white, Sandtone, Terratone and forest green.

Ⓕ A factory-applied, one-piece compression-type rubber weatherstrip continues in one plane around the panel to provide maximum effectiveness against water and air infiltration. Corners of the weatherstrip are welded to eliminate gaps between the panel and the frame/sill shoulder.

Mortise-and-Tenon Joints



Mortise and tenon joints prevent panel sag and maintain smooth operation.

GLASS

Ⓖ In addition to stainless steel glass spacers, black or white glass spacers are now available to allow the spacer to blend in with the unit color.

Ⓗ Panels are silicone bed glazed and finished with an interior wood stop.

Ⓘ High-Performance options include:

- Low-E4® tempered glass
- Low-E4 HeatLock® tempered glass
- Low-E4 SmartSun™ tempered glass
- Low-E4 SmartSun HeatLock tempered glass
- Low-E4 Sun tempered glass

Additional glass options are available. Contact your Andersen supplier.

A removable translucent film helps shield the glass from damage during delivery and construction, and simplifies finishing at the job site.

Patterned glass options are available. See page 12 for more details.

EXTERIOR & INTERIOR OPTIONS

EXTERIOR COLORS



White · Sandtone · Terratone · Forest Green

INTERIOR OPTIONS



Pine · Maple · Oak · White

Naturally occurring variations in grain, color and texture of wood make each window one of a kind. All wood interiors are unfinished unless a finish is specified. Printing limitations prevent exact replication of colors and finishes. See your Andersen supplier for actual color and finish samples.

HARDWARE OPTIONS Sold Separately

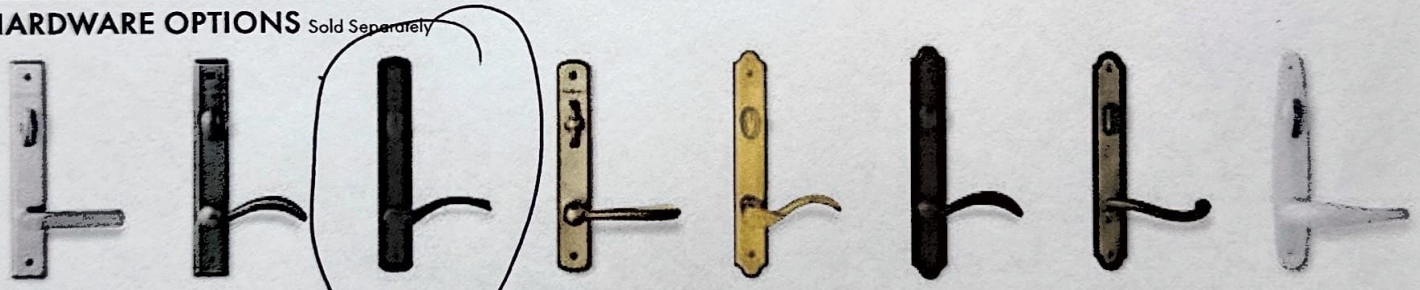

ANVERS®
Bright Brass
Oil Rubbed Bronze
Satin Nickel

YUMA®
Distressed Bronze
Distressed Nickel

NEWBURY®
Antique Brass
Bright Brass
Brushed Chrome
Oil Rubbed Bronze
Polished Chrome
Satin Nickel

ALBANY
Black
Gold Dust
Stone
White

COVINGTON™
Antique Brass
Bright Brass
Oil Rubbed Bronze

ENCINO®
Distressed Bronze
Distressed Nickel

WHITMORE®
Antique Brass
Bright Brass
Oil Rubbed Bronze
Satin Nickel

TRIBECA®
Black
Stone
White

Bold name denotes finish shown.

HARDWARE FINISHES



Antique Brass · Black · Bright Brass · Brushed Chrome · Distressed Bronze · Distressed Nickel

Gold Dust · Oil Rubbed Bronze · Polished Chrome · Satin Nickel · Stone · White

FSB® HARDWARE & FINISHES

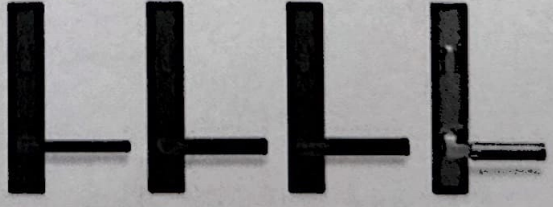

1035 · 1075 · 1076 · 1102**

Black Anodized Aluminum

Satin Stainless Steel

*Visit andersenwindows.com/warranty for details.
**FSB style 1102 is not available in black anodized aluminum.
"FSB" is a registered trademark of Franz Schneider Brakel GmbH & Co. Matching hinges are available for inswing patio doors.

Mix-and-match interior and exterior style and finish options are available; excludes FSB hardware.
Bright brass and satin nickel finishes feature a 10-year limited warranty.
Tribeca and Albany hardware are zinc die cast with powder-coated durable finish. Other hardware is solid forged brass.
Distressed bronze and oil rubbed bronze are "living" finishes that will change with time and use.

Custom Sizes and Specification Formulas

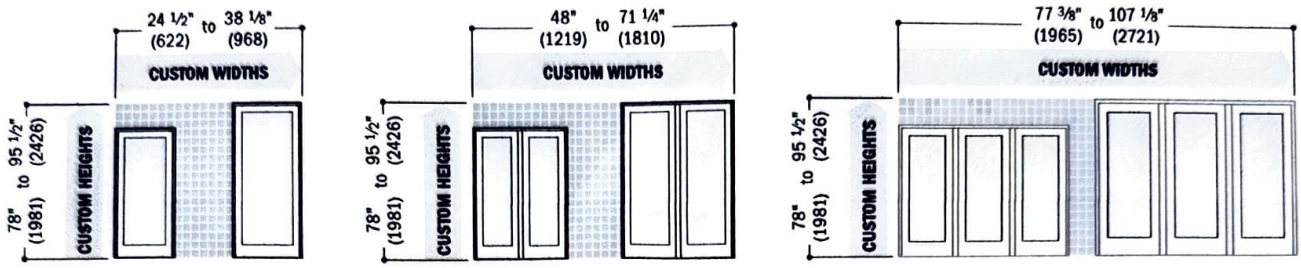

Clear Opening	Height = height − 4.22" (107) Single-Panel Width = width − 5.744" (145) Two-Panel, two panels open Width = width − 7.394" (187) Two-Panel, one panel open Width = (width − 10.550" (267)) ÷ 2 Three-Panel Width = (width − 16.106" (409)) ÷ 3	**Minimum R.O.**	Width = width + 3/4" (19) Height = height + 1/2" (13)	**Unobst. Glass**	Single-Panel Width = width − 11.22" (285) Height = height − 16.05" (408) Two-Panel Width = width − 21.5" (546) Height = height − 16.05" (408) Three-Panel Width = width − 32.55" (827) Height = height − 16.05" (408)

Available in 1/8" (3) increments between minimum and maximum widths and heights. Some restrictions apply. Measurement guide can be found at **andersenwindows.com/measure.**

- Clear opening width formulas are based on panel(s) in a 90° open position.
- Dimensions in parentheses are in millimeters.
- **Clear Opening** formulas provide dimensions for determining area available for egress. Vent opening, or area available for passage of air, is equal to clear opening. **Minimum R.O.** (minimum rough opening) formulas provide minimum rough opening width and height dimensions. **Unobst. Glass** (unobstructed glass) formulas provide dimensions for determining area available for passage of light.

Grille Patterns

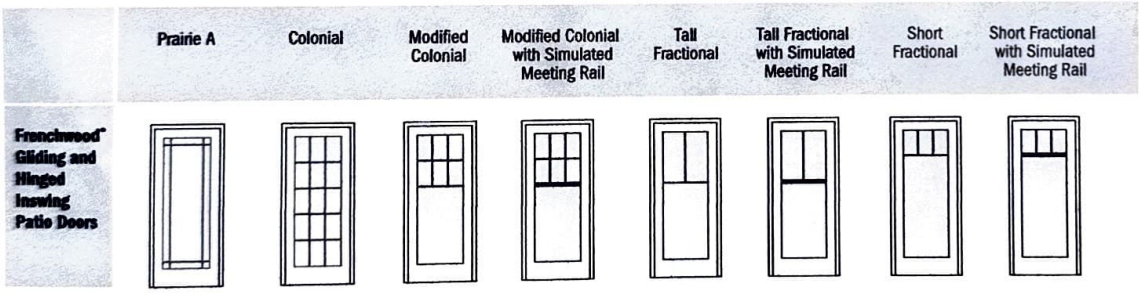

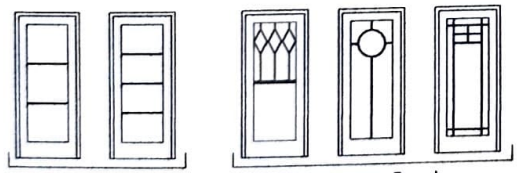

Specified Equal Light Examples

Custom Pattern Examples

Number of lights and overall pattern varies with panel size. Patterns not available in all configurations. Specified equal light and custom patterns are also available. For more grille options, see page 14 or visit **andersenwindows.com/grilles.**

Interior Extension Jambs

Use of interior extension jambs or drywall return will restrict panel operation on jamb-hinged patio doors. Jamb-hinged patio doors must be installed flush to the interior to achieve full panel operation.

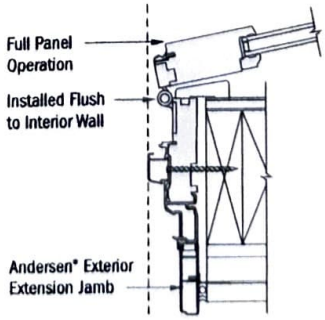

Jamb-Hinged Patio Door in 2 x 6 Wall without Interior Extension Jambs

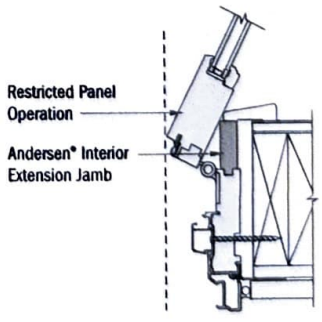

Jamb-Hinged Patio Door in 2 x 6 Wall with Interior Extension Jambs

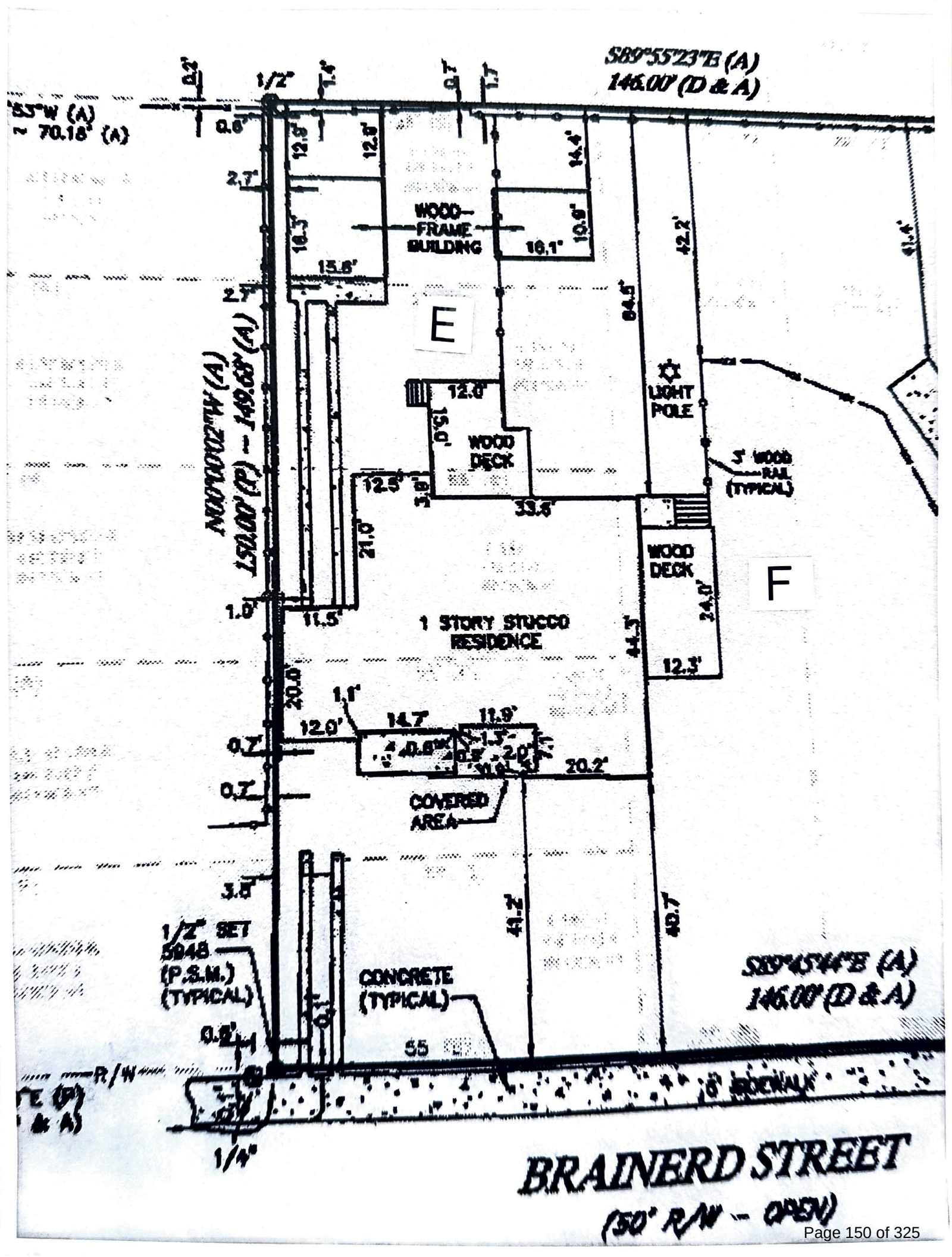
S89°55'23"E (A)
146.00' (D & A)
N00°00'02"W (A)
150.00' (P) – 149.68' (A)
WOOD FRAME BUILDING
E
F
LIGHT POLE
WOOD DECK
5' WOOD RAIL (TYPICAL)
1 STORY STUCCO RESIDENCE
COVERED AREA
1/2" SET 5948 (P.S.M.) (TYPICAL)
CONCRETE (TYPICAL)
S89°45'44"E (A)
146.00' (D & A)
6' SIDEWALK
BRAINERD STREET
(50' R/W – OPEN)

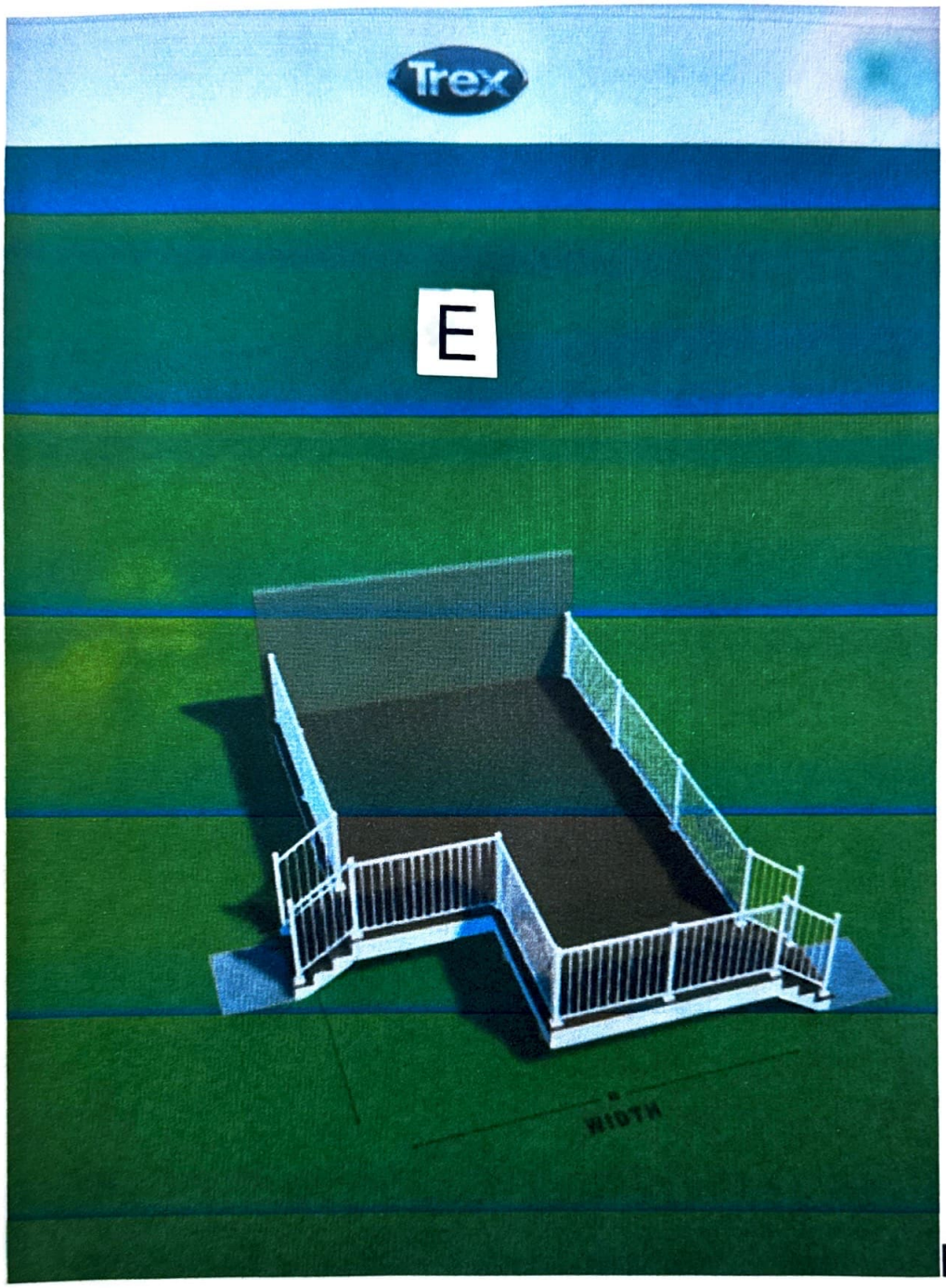

Deck size:

16x19

Sent from my iPhone

From: Gunndum gunndum@cox.net
Subject: Torrance Trex deck job
Date: Dec 6, 2023 at 19:12:16
To: ken.torrance@gmail.com

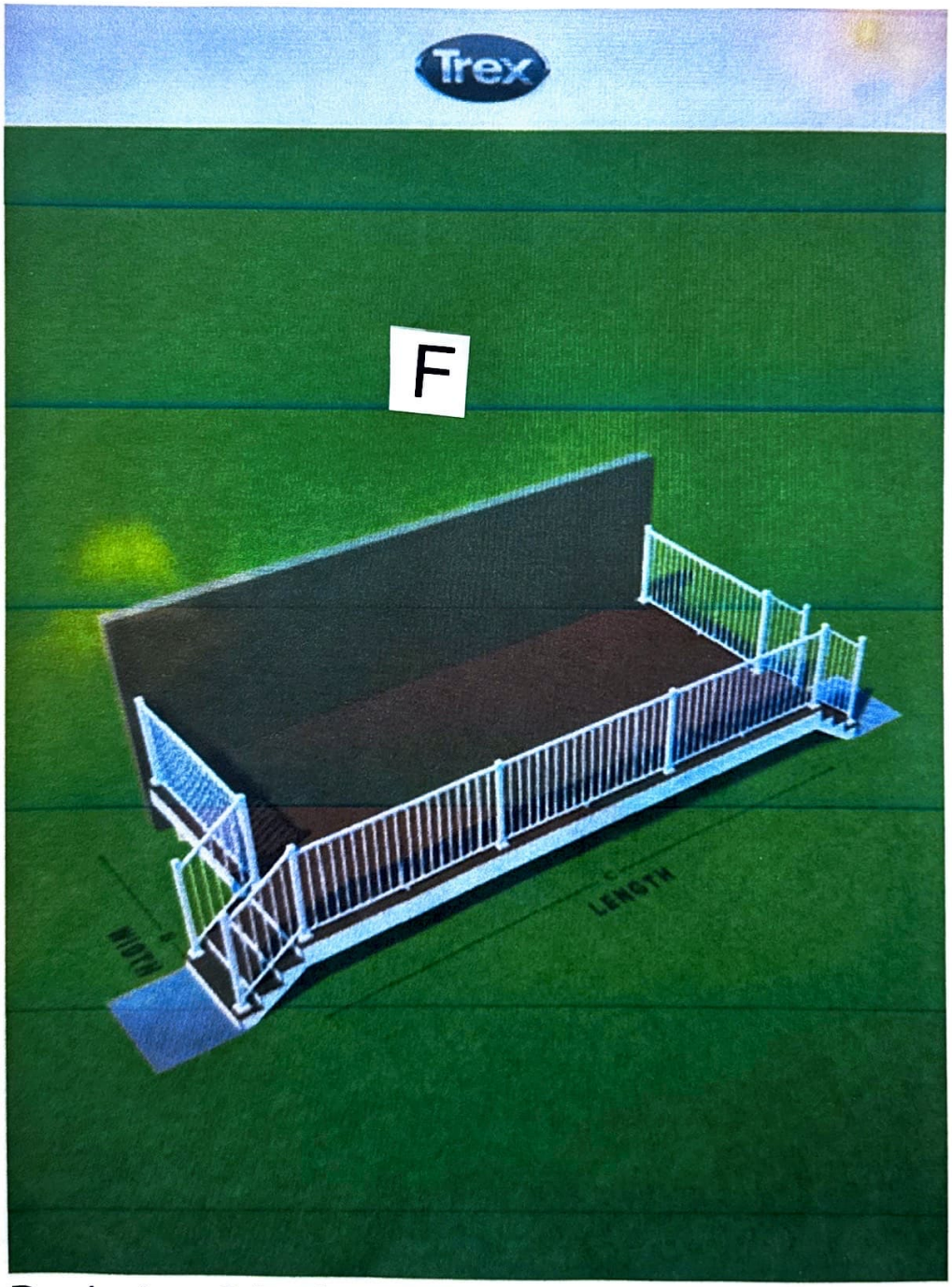

Deck size: 24x12

Aria Railing - https://www.ariarailing.com/

36 in. x 6 ft. Black Powder Coated Aluminum Preassembled Deck Railing

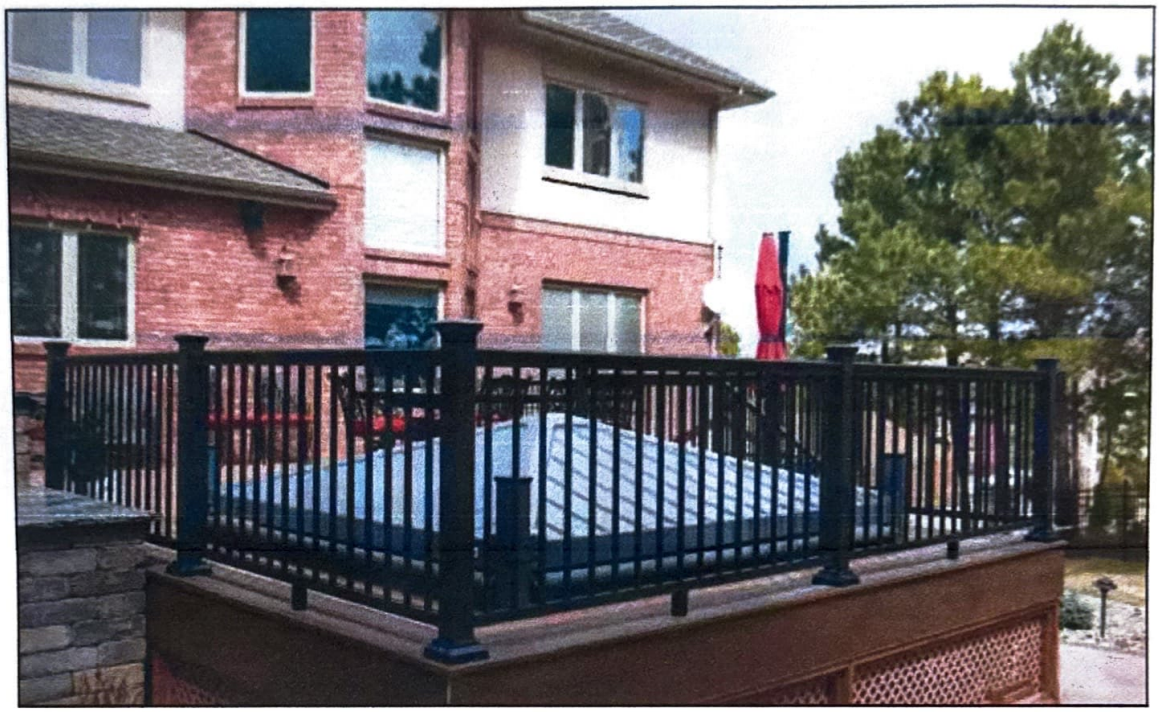

Product Overview

A charming and appealing addition to any area, Aria Railing provides a sleek and stunning solution to your safety concerns. Every home would benefit from the assurance this product provides. Easily installed, complete with impeccable customer service support, Aria railing is the crowning touch to your outdoor retreat, inside stairways and alfresco havens. Aria All-Aluminum Railing Panels are long-lasting and come with a 20-year warranty. For fast and simple installation, each kit includes one pre-assembled panel, one deck rail cut kit for securing to posts, top and bottom rail snap and a support leg. It features the Aria-Interlocking advantage that uses a hidden fastener system for a sturdy, textured railing unit.

- 36 in. H x 72 in. L installed
- Actual panel size 34 in. H x 69.43 in. L
- Preassembled panel for quick and easy installation
- Kit includes railing panel, top and bottom rail snaps, mounting hardware, support leg and install instructions
- Durable powder-coated finish
- 20-year warranty
- No rivets or welds
- Hidden fastener system
- Engineered, tested and approved to ICC-ES AC273 residential and commercial building codes
- Commercial grade railing for multifamily that meets ICC-ES criteria for load and deflection

REVISIONS - BALLOONS DENOTE CHANGES			
REV.	DESCRIPTION	DATE	APPROVED
A		8/8/2017	ZAG

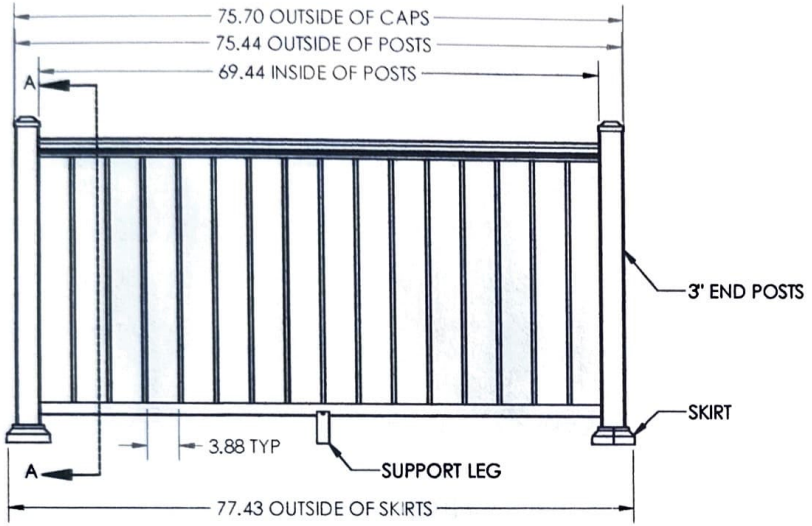

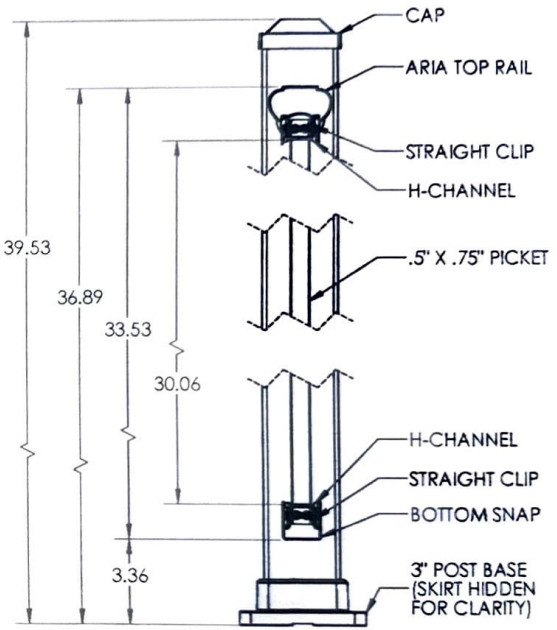

SECTION A-A

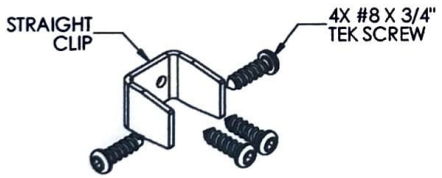

4X CLIP DETAIL

NOTES:
1. ALL RAIL MUST BE ASSEMBLED AND FASTENED IN ACCORDANCE WITH ULTRALOX'S INSTALLATION INSTRUCTIONS.
2. AVAILABLE COLORS ARE BLACK - WHITE - BRONZE.

UNLESS OTHERWISE SPECIFIED:		NAME	DATE
DIMENSIONS ARE IN INCHES TOLERANCES: SURFACE FINISH: 125 RMS ANGULAR: ±.5 DEG LINEAR: .X ±.02 .XX ±.010 .XXX ±.005	DRAWN	ZAG	8/8/17
	CHECKED		
	ENG APPR.		
	MFG APPR.		
THIRD ANGLE PROJECTION	INTERPRET GEOMETRIC TOLERANCING PER: ASME Y14.5-2009		
MATERIAL	PROPRIETARY AND CONFIDENTIAL THE INFORMATION CONTAINED IN THIS DRAWING IS THE SOLE PROPERTY OF Ultralox. ANY REPRODUCTION IN PART OR AS A WHOLE WITHOUT THE WRITTEN PERMISSION OF Ultralox.		
FINISH			
DO NOT SCALE DRAWING			

ULTRALOX INTERLOCKING TECHNOLOGY

TITLE: SHOP DRAWING,
ARIA TOP RAIL,
3" END POSTS,
36" PICKETS, 6' SECTION

SIZE	DWG. NO.	REV
B		A

SCALE: 1:10 WEIGHT: SHEET 1 OF 2

City of Pensacola

222 West Main Street
Pensacola, FL 32502

Memorandum

File #: 24-288 | Architectural Review Board | 3/21/2024

LEGISLATIVE ACTION ITEM

SUBJECT:

1015 N. Reus Street
North Hill Preservation District / Zone PR-1AAA / City Council District 6
Conceptual Review for Exterior Alterations at a Contributing Structure

SUMMARY:

Martin Mullin is seeking conceptual approval for exterior alterations of a contributing structure including replacing the roof with new terra cotta tiles, repairing and painting the existing brick and stucco Sherwin Williams Dover White, replacing existing windows, and altering the southwest corner for a new side entry.

RECOMMENDED CODE SECTIONS
Sec. 12-3-10(2)d.2.i-ii.(a)(b) North Hill Preservation District; Procedure for review; Decisions; General considerations and Rules governing decisions.
Sec. 12-3-10(2)e.5. NHPD; Regulations and guidelines for any development within the preservation district; Paint colors.
Sec. 12-3-10(2)f.1-3. NHPD; Restoration, rehabilitation, alterations or additions to existing contributing structures in the North Hill preservation district.
Sec. 12-3-10(2)h. NHPD; Regulations for new construction and additions to existing structures in the North Hill preservation district.

ATTACHMENTS:

1. Florida Master Site File Form
2. Images
3. Application and Materials



HISTORICAL STRUCTURE FORM
FLORIDA SITE FILE
Version 2.0 7/92

__ Original
x Update

Site #8 ES00715
Recorder #
Field Date 5 / 3 / 95
Form Date 7 / 7 / 95

SITE NAMES (addr. if none) JACOB KUGELMAN HOUSE [MULT. LIST. #8]
SURVEY NORTH HILL [SURVEY # 4758]
NATIONAL REGISTER CATEGORY X building __structure X district __site __object

LOCATION & IDENTIFICATION

ADDRESS (Include N,S,E,W; st., ave., etc.) 1015 N. REUS ST.
CROSS STREETS nearest/between SW CORNER OF REUS AND GONZALEZ
NEAREST CITY/TOWN PENSACOLA IN CURRENT CITY LIMITS X yes __no
COUNTY ESCAMBIA TAX PARCEL # 9010-110-053
SUBDIVISION NAME NORTH HILL BLOCK 53 LOT NO. 11-13
OWNERSHIP __private-profit __priv-nonprofit X priv-indiv __priv-unspecified __city __county __state __federal __unknown
NAME OF PUBLIC TRACT (e.g., park) BELMONT TRACT
ROUTE TO

MAPPING

USGS 7.5' MAP NAME 30087-D2-TF-024 1987
TOWNSHIP 2S RANGE 30W SECT. 19 1/4 1/4-1/4 IRREG. SECT.? __y __n
[UTM: ZONE 16 17 EASTING | | | | | | 0 | NORTHING | | | | | | | 0 |]
PLAT OR OTHER MAP (Map's name, location)

DESCRIPTION

STYLE MASO EXTERIOR PLAN IRRE NO. STORIES 1
STRUCTURAL SYSTEMS MASO
FOUNDATION: Types CONT Materials BRIC
EXTERIOR FABRICS BRIC
ROOF: Types FLAT Materials BUIL
Secondary strucs. (dormers etc.) TWO-STORY HIPPED ADDITION
CHIMNEY : No. 2 Materials BRIC LOCATIONS NORTH EXTENSION, SOUTH EXTENSION
WINDOWS (types, materials, and placements)
DHS, 6/1, WOOD

MAIN ENTRANCE (stylistic details)
PORCHES: #open #closed #incised Locations EAST, ONE STORY GABLE PORCH ON BRICK
Porch roof types PIERS, ONE BAY, ACCESS FROM EAST
EXTERIOR ORNAMENT

INTERIOR PLAN CONDITION: __excellent X good __fair __deteriorated __ruinous
SURROUNDINGS (N-None, S-Some, M-Most, A-All or nearly all) __commercial A residential __institutional __rural
ANCILLARY FEATURES (No., type of outbuildings; major landscape features)

ARCHAEOLOGICAL REMAINS AT SITE Archaeological form completed? _y _n (No-explain; yes-attach!)
Artifacts or other remains
NARRATIVE (E.g. description of interior, landscape, architecture, etc; please limit to 3 lines and attach full statement on separate sheet)

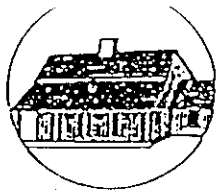

HISTORICAL STRUCTURE FORM

Site #8 _____

HISTORY

CONSTRUCTION DATE 1927 CIRCA x yes __no
ARCHITECT: (last name first) _____
BUILDER: (last name first) _____
MOVES __yes x no Dates _____ Orig.addr. _____
ALTERATIONS __yes __no Dates _____ Nature _____
ADDITIONS __yes __no Dates _____ Nature _____
ORIGINAL USES (give dates) RESIDENCE
INTERMEDIATE USES (give dates) RESIDENCE
PRESENT USES (give dates) RESIDENCE
OWNERSHIP HISTORY (especially original owner) JACOB KUGELMAN (ORIGINAL)
MYRTLE J. SCOTT (CURRENT)

SURVEYOR'S EVALUATION OF SITE

Potentially elig. for local designation? _yes _no _insuff. info
Individually elig. for Nat. Register? _yes _no _insuff. info
Potential contributor to NR district? _yes _no _insuff. info

Local Designation Category
_____
_____

HISTORICAL ASSOCIATIONS (ethnic heritage, etc.) _____

EXPLANATION OF EVALUATION (required; limit to three lines; attach full statement on separate sheet)

CROSS-REFERENCES

BIBLIOGRAPHIC REFERENCES (Author, date, title, publication information. If unpublished, give FSF Manuscript Number, or location where available) _____

PHOTOGRAPHS (REQUIRED) B&W print(s) at least 3 x 5, at least one main facade. Label the back of the print with the FSF site number (site name if not available), direction and date of photograph: use pencil. Attach to back of the second to last page with a plastic or coated clip. Location of negatives/neg. nos. R14, F13-14

RECORDER

NAME (last first)/ADDR/PHONE/AFFILIATION HPPB

FOR DETAILED INSTRUCTIONS: *Guide to the 1992 Historic Structure Form of the Florida Site File.*

DHR USE ONLY	OFFICIAL EVALUATIONS	DHR USE ONLY
NR DATE __/__/__	KEEPER-NR ELIGIBILITY*: y n pe u	Date __/__/__
DELIST DATE __/__/__	SHPO-NR ELIGIBILITY*: y n pe u	Date __/__/__
	LOCAL DESIGNATION*: _____	Date __/__/__
	Local office	

* y=Yes; n=No; pe=Potentially Eligible; u=Insufficient Information

REQUIRED:
(1) USGS MAP WITH STRUCTURE PINPOINTED
(2) LARGE SCALE STREET OR PLAT MAP
(3) PHOTO OF MAIN FACADE, PREFER B&W, AT LEAST 3X5

STATE OF FLORIDA
DEPARTMENT OF STATE
Division of Archives, History
and Records Management
DS-HSP-3AAA Rev. 3-79

FLORIDA MASTER SITE FILE
Site Inventory Form

FDAHRM 802 = =
1009 = =
Site No. 8S715

Site Name Kugelman, Jacob House 830 = = Survey Date 8005 820 = =
Address of Site: 1015 N. Reus Street, Pensacola, FL 32501 905 = =
Instruction for locating SW corner of N. Reus St. and W. Gonzalez St. 813 = =

Location: Belmont Tract (subdivision name) 53 (block no.) 11-13 (lot no.) 868 = =
County: Escambia 808 = =
Owner of Site: Name: Luckey, Willie T. and Mertis T.
Address: 1015 N. Reus Street, Pensacola, FL 32501 902 = =

Type of Ownership private 848 = = Recording Date 832 = =
Recorder:
Name & Title: Gantzhorn, Alan; Guedez, Susan
Address: HPPB 818 = =

Condition of Site: Integrity of Site: Original Use residence 838 = =

Check One		Check One or More		
☐ Excellent	863 = =	■ Altered	858 = =	Present Use residence 850 = =
☐ Good	863 = =	☐ Unaltered	858 = =	Dates: Beginning +1925 844 = =
■ Fair	863 = =	■ Original Site	858 = =	Culture/Phase American 840 = =
☐ Deteriorated	863 = =	☐ Restored ( ) (Date:) ( )	858 = =	Period 20th century 845 = =
		☐ Moved ( ) (Date:) ( )	858 = =	

NR Classification Category: District 916 = =

Threats to Site:

Check One or More

☐ Zoning ( ) ( )	( ) 878 = =	☐ Transportation ( ) ( )	( ) 878 = =
☐ Development ( ) ( )	( ) 878 = =	☐ Fill ( ) ( )	( ) 878 = =
☐ Deterioration ( ) ( )	( ) 878 = =	☐ Dredge ( ) ( )	( ) 878 = =
☐ Borrowing ( ) ( )	( ) 878 = =		
☐ Other (See Remarks Below):	878 = =		

Areas of Significance: Architecture, History 910 = =

Significance:

The facade of this house has been altered, but still shows evidence of its original Mediterranean Revival style. It was built by Bella and Jacob Kugelman there from 1925-1945. Mr. Kugelman was the president of the National Dry Goods Company.

SEE SITE FILE STAFF FOR ORIGINAL PHOTO(S) OR MAP(S)
911 = =

ARCHITECT Unknown 872 = =

BUILDER Unknown 874 = =

STYLE AND/OR PERIOD ~~Masonry~~ Vernacular 964 = =

PLAN TYPE Irregular 966 = =

EXTERIOR FABRIC(S) brick, common bond 854 = =

STRUCTURAL SYSTEM(S) masonry 856 = =

PORCHES E/ 1 story gable porch on brick piers, 1 bay, access from E 942 = =

FOUNDATION: continuous brick 942 = =

ROOF TYPE: flat 942 = =

SECONDARY ROOF STRUCTURE(S): 2 story hipped addition 942 = =

CHIMNEY LOCATION: Exterior N; Exterior S in addition 942 = =

WINDOW TYPE: DHS, 6/1, wood 942 = =

CHIMNEY: brick 882 = =

ROOF SURFACING: built-up 882 = =

ORNAMENT EXTERIOR: 882 = =

NO. OF CHIMNEYS 2 952 = = NO. OF STORIES 1 950 = =

NO. OF DORMERS 0 954 = =

Map Reference (incl. scale & date) USGS 7.5 MIN Pensacola 1970; North Hill, Gordon Richmond, 1974 809 = =

Latitude and Longitude: ° ' " ° ' " 800 = =

Site Size (Approx. Acreage of Property): LT 1 833 = =

LOCATION SKETCH OR MAP N

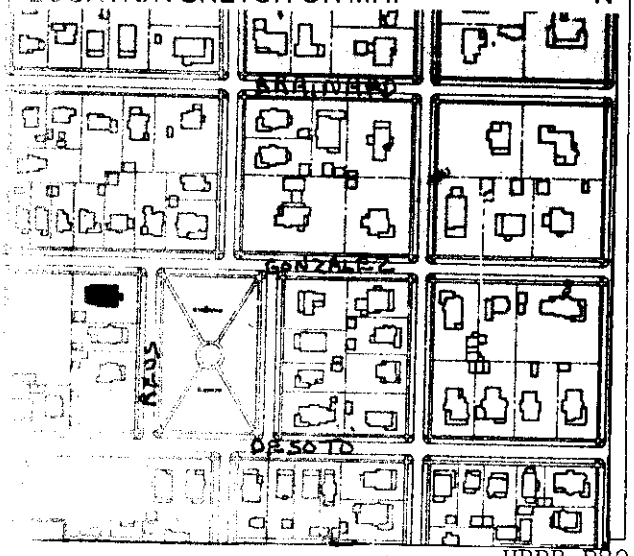

Township	Range	Section
2S	30W	19

812 = =

UTM Coordinates:

890 = =

Zone Easting Northing

Photographic Records Numbers HPPB P80.21 Fr 29; NH 8-36 860 = =

Contact Print

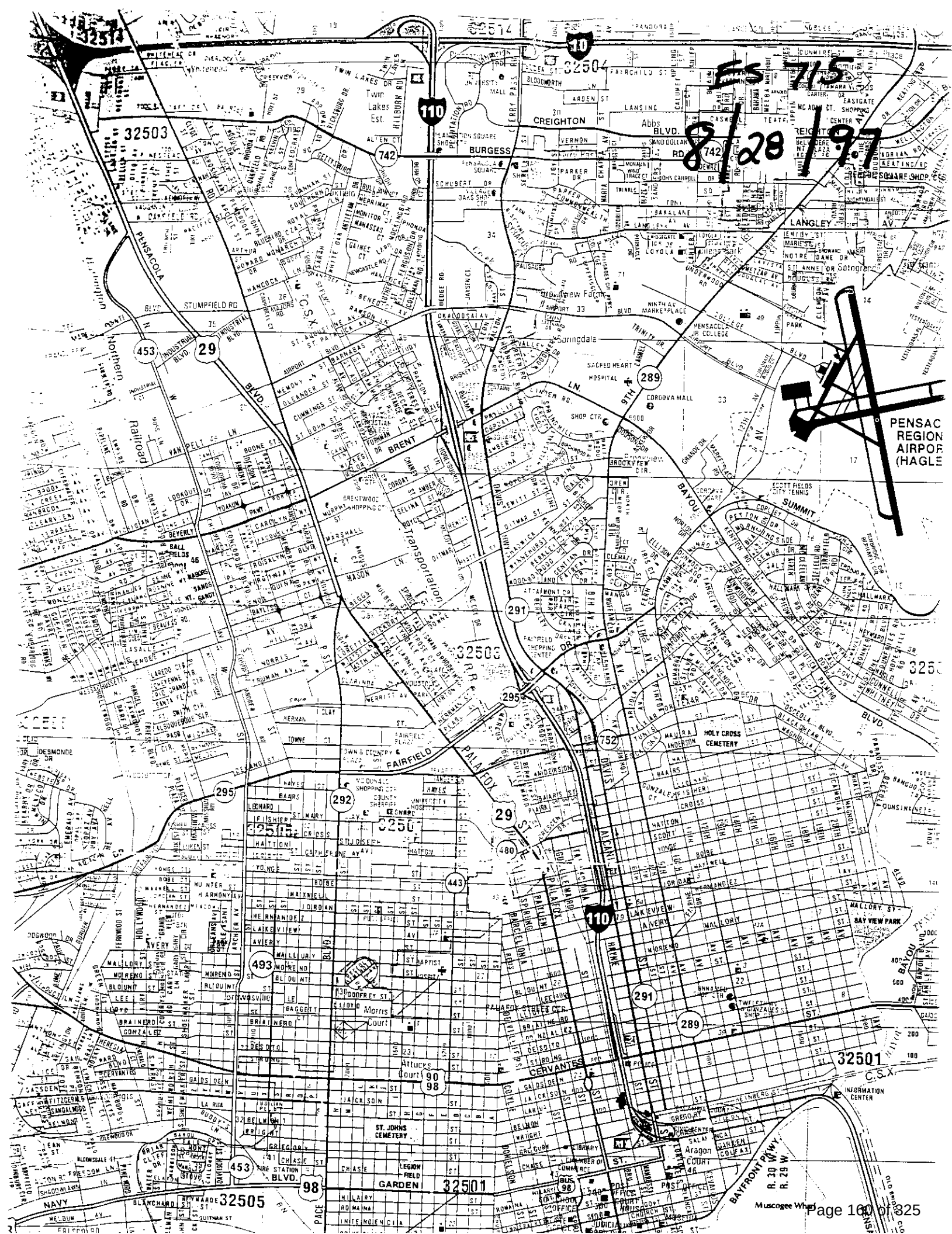
ES 715
8/28/97
PENSAC
REGION
AIRPOR
(HAGLE
32503
32504
32505
32501
CREIGHTON
BURGESS
LANGLEY
BRENT
FAIRFIELD
PALAFOX
CERVANTES
GARDEN
NAVY
BAYOU
SUMMIT
HOLY CROSS CEMETERY
ST. JOHNS CEMETERY
INFORMATION CENTER
Muscogee Wharf
BAYFRONT PKWY
R. 30 W.
R. 29 W.
PENSACOLA
Northern
Railroad
Transportation
Springdale
Brookview Farms
Twin Lakes Est.
Aragon Court
Morris Court
Attucks Court
Gadsden
Jackson
Hayes
Leonard
Fisher
Hatton
Yonge
Bobe
Maxwell
Jordan
Hernandez
Lakeview
Avery
Mallory
Moreno
Blount
Lee
Brainerd
Gonzalez
Desoto
Strong
Cervantes
Gregory
Chase
Belmont
Wright
Bay View Park
Eastgate Shopping Center
Pensacola Square
Pensacola Jr. College
Sacred Heart Hospital
Cordova Mall
Scott Fields City Tennis
Fairfield Shopping Center
Fire Station
Legion Field
Pace
Bus 98
110
10
29
453
742
289
291
295
292
480
443
493
90
98
752

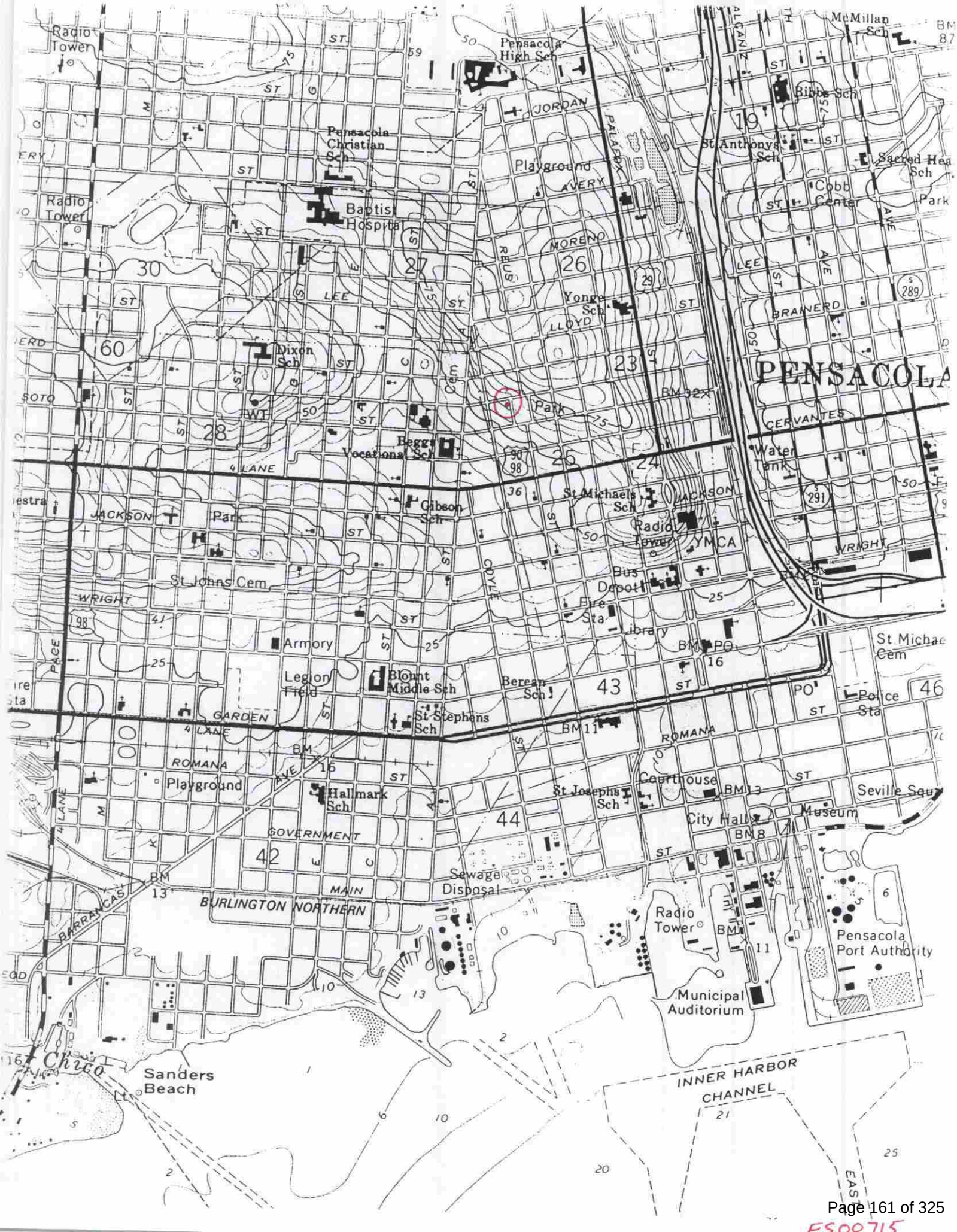
Radio Tower
Pensacola High Sch
McMillan Sch
Bibbs Sch
Pensacola Christian Sch
Playground
St Anthonys Sch
Sacred Hea Sch
Cobb Center
Park
Baptist Hospital
Radio Tower
Yonge Sch
Dixon Sch
PENSACOLA
Park
Water Tank
Beggs Vocational Sch
Gibson Sch
St Michaels Sch
Park
Radio Tower
YMCA
St Johns Cem
Bus Depot
Fire Sta
Library
Armory
PO
Legion Field
Blount Middle Sch
Berean Sch
St Stephens Sch
Police Sta
Playground
Hallmark Sch
Courthouse
St Josephs Sch
Seville Squ
City Hall
Museum
Sewage Disposal
BURLINGTON NORTHERN
Radio Tower
Pensacola Port Authority
Municipal Auditorium
Chico
Sanders Beach
INNER HARBOR
CHANNEL
JACKSON
WRIGHT
GARDEN
ROMANA
GOVERNMENT
MAIN
BARRANCAS
JORDAN
AVERY
MORENO
LEE
LLOYD
BRAINERD
CERVANTES
SOTO
PACE
4 LANE

ES08715

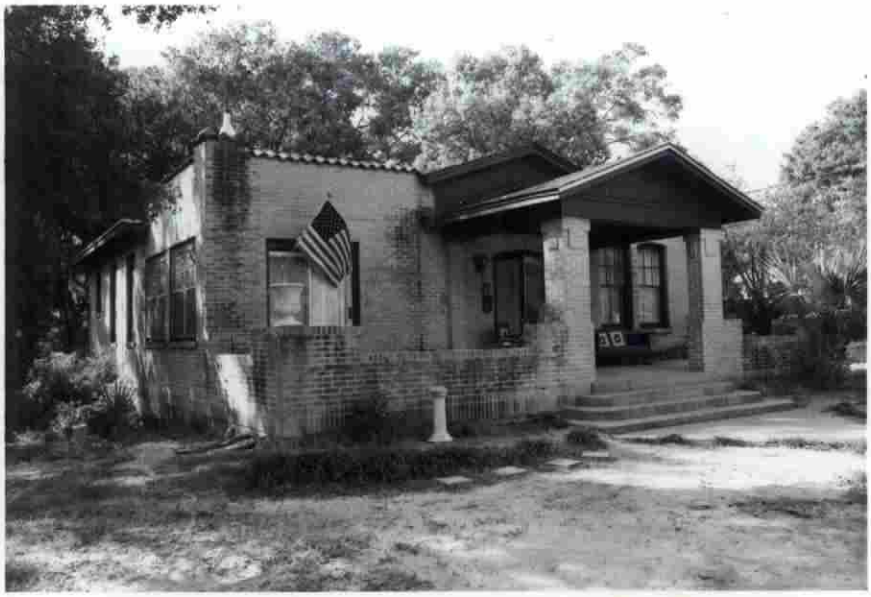

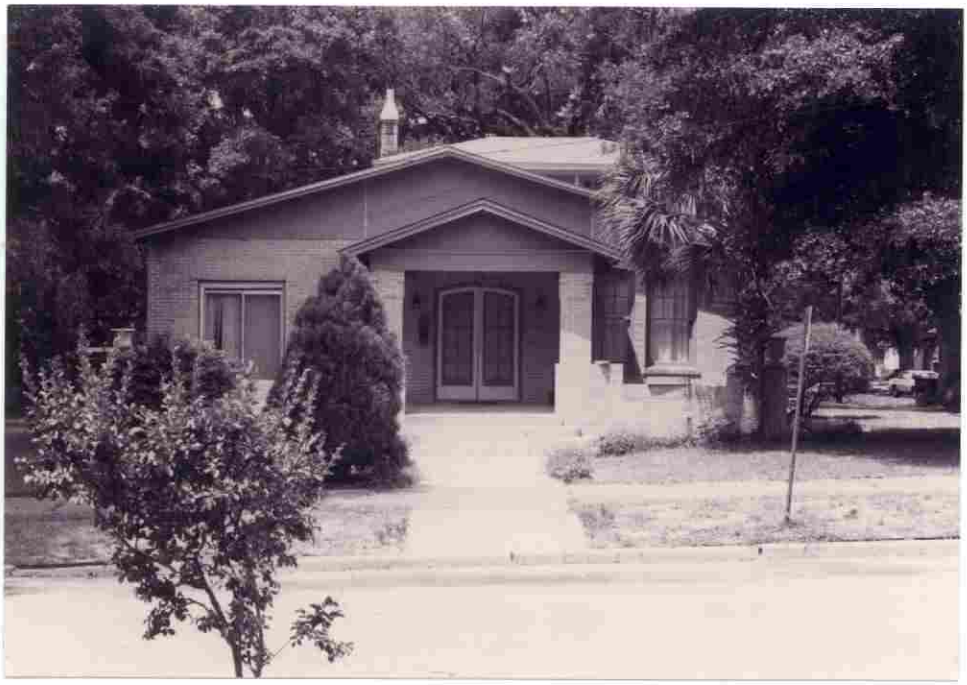

1015 N. Reus Street

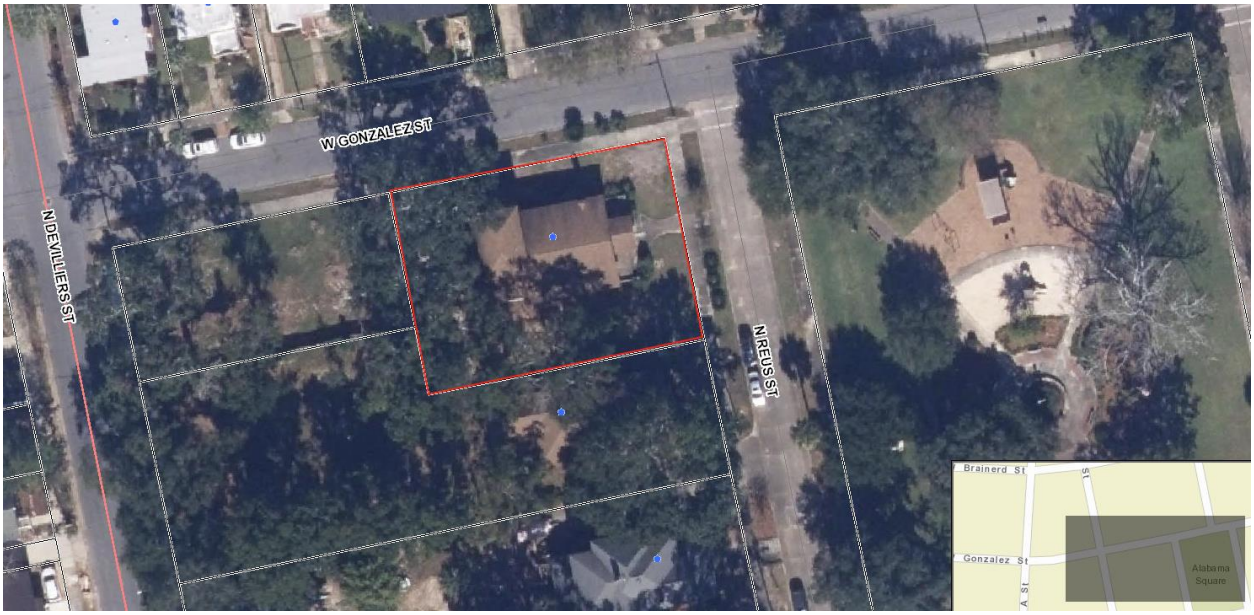



City of Pensacola
America's First Settlement And Most Historic City

Architectural Review Board Application
Full Board Review

Application Date: 2.29.24

Project Address: 1015 North Rues Street

Applicant: Martin Mullin

Applicant's Address: 405 E. Sunset Ave. 32507

Email: marty@mullinarchitects.com Phone: 850.857.9925

Property Owner: Becky and Sean Mick
(If different from Applicant)

District: ☐ ***PHD*** ☒ ***NHPD*** ☐ ***OEHPD*** ☐ ***PHBD*** ☐ ***GCD***

Application is hereby made for the project as described herein:

☑ Residential Homestead – $50.00 hearing fee

☐ Commercial/Other Residential – $250.00 hearing fee

** An application shall be scheduled to be heard once all required materials have been submitted and it is deemed complete by the Secretary to the Board. You will need to include eight (8) copies of the required information. Please see pages 3 – 4 of this application for further instruction and information.*

Project specifics/description:
PLEASE SPECIFY IF CONCEPTUAL DISCUSSION ITEM, CONCEPTUAL REVIEW, OR FINAL REVIEW.

Conceptual Review:
Replace roof w/ new tera cotta tiles, paint and repair existing brick and stucco. Replace existing windows to match traditional look with new impact ratings. Remove old construction at SW corner for new proposed entry and construction.

I, the undersigned applicant, understand that payment of these fees does not entitle me to approval and that no refund of these fees will be made. I have reviewed the applicable zoning requirements and understand that I must be present on the date of the Architectural Review Board meeting.

Martin Mullin
Applicant Signature

2.29.24
Date

Planning Services
222 W. Main Street * Pensacola, Florida 32502
(850) 435-1670
Mail to: P.O. Box 12910 * Pensacola, Florida 32521

REMOVE FURNACE EXHAUST CHIMNEY

REMOVE EXISTING ALUMINUM WINDOW UNITS

REMOVE EXISTING ALUMINUM SLIDING DOOR



REMOVE PLYWOOD FINISH AT GABLE AREA FOR NEW CONSTRUCTION











REMOVE EXTERIOR WALL PORTION FOR NEW CONSTRUCTION

REMOVE EXTERIOR WALL PORTION FOR NEW CONSTRUCTION



MULLIN ARCHITECTS

P.O.Box 18328
Pensacola, Florida 32523
marty@mullinarchitects.com
Phone: 850-857-9925

THIS DRAWING IS THE PROPERTY OF THE ARCHITECT AND MAY NOT BE USED OR REPRODUCED WITHOUT HIS WRITTEN PERMISSION. COPYRIGHT – 2013 BY MULLIN ARCHITECTS, LLC

MICK RESIDENCE

HISTORIC RESTORATION

1015 NORTH REUS STREET
PENSACOLA, FLORIDA

FOR:

REV:	DATE:

Design Development

February 28, 2024

Exterior Photos

A-2.00a

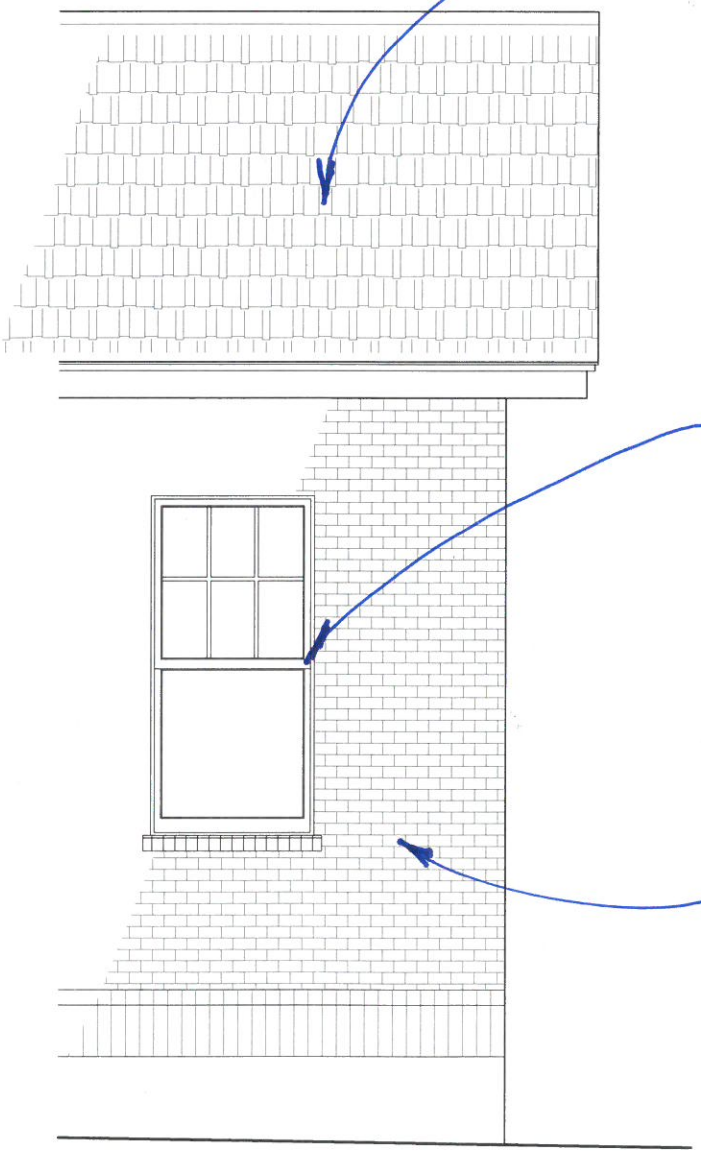



TERRA COTTA
ROOF TILES
ANZIANI BLEND

WINDSOR · IMPACT
ALABASTER

PAINTED BRICK
DOVER WHITE
SW 7008

WEST GONZALEZ STREET

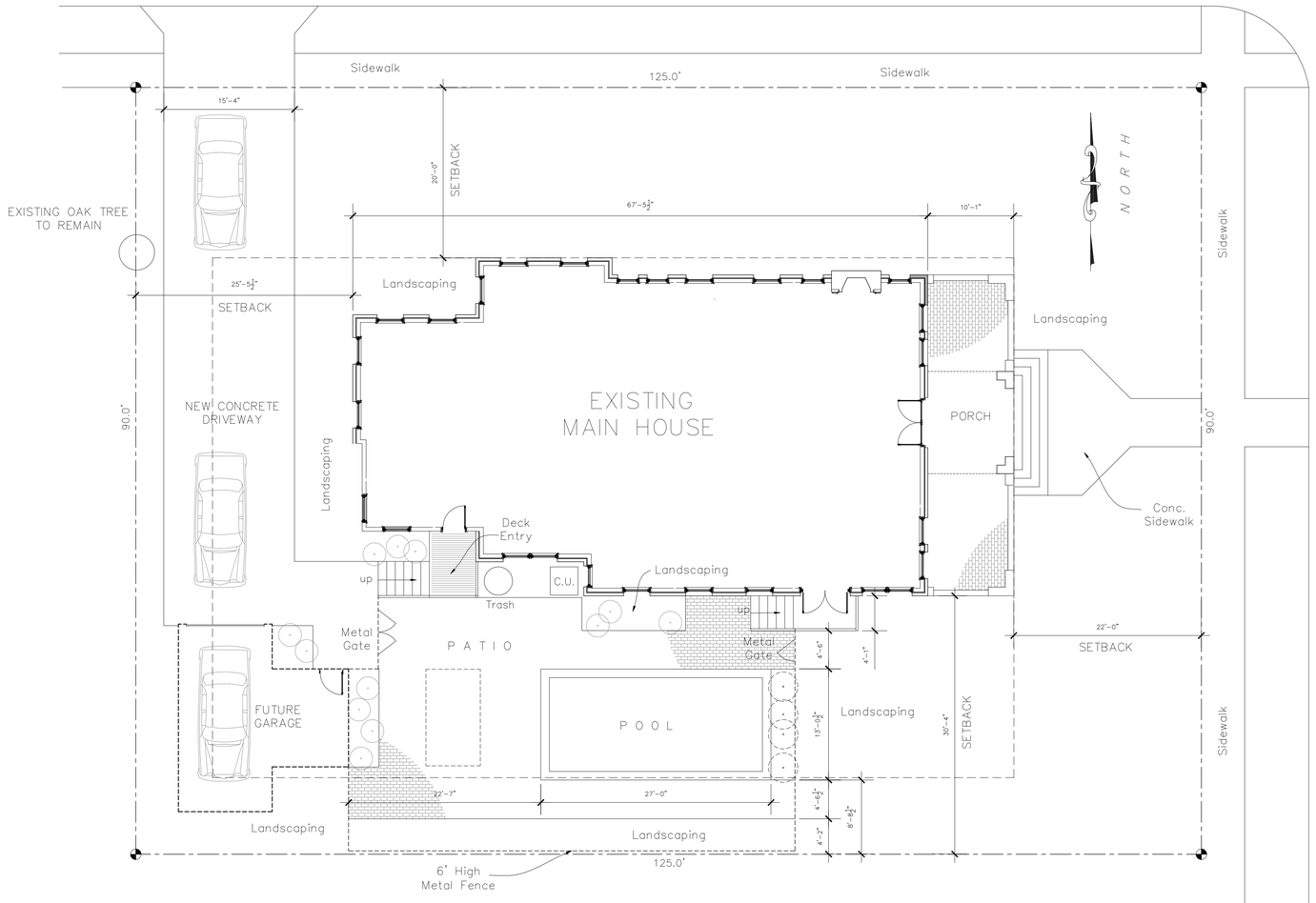

NORTH REUS STREET

A
A-1.00

ARCHITECTURAL SITE PLAN

Scale: 1/8" = 1'-0"

MULLIN
ARCHITECTS

P.O.Box 18328
Pensacola, Florida 32523
marty@mullinarchitects.com
Phone: 850-857-9925

THIS DRAWING IS THE PROPERTY OF THE ARCHITECT AND MAY NOT BE USED OR REPRODUCED WITHOUT HIS WRITTEN PERMISSION. COPYRIGHT – 2013 BY MULLIN ARCHITECTS, LLC

MICK RESIDENCE
HISTORIC RESTORATION
1015 NORTH REUS STREET
PENSACOLA, FLORIDA

FOR:

REV:	DATE:

Design Development

February 28, 2024

Architectural Site Plan

A-1.00

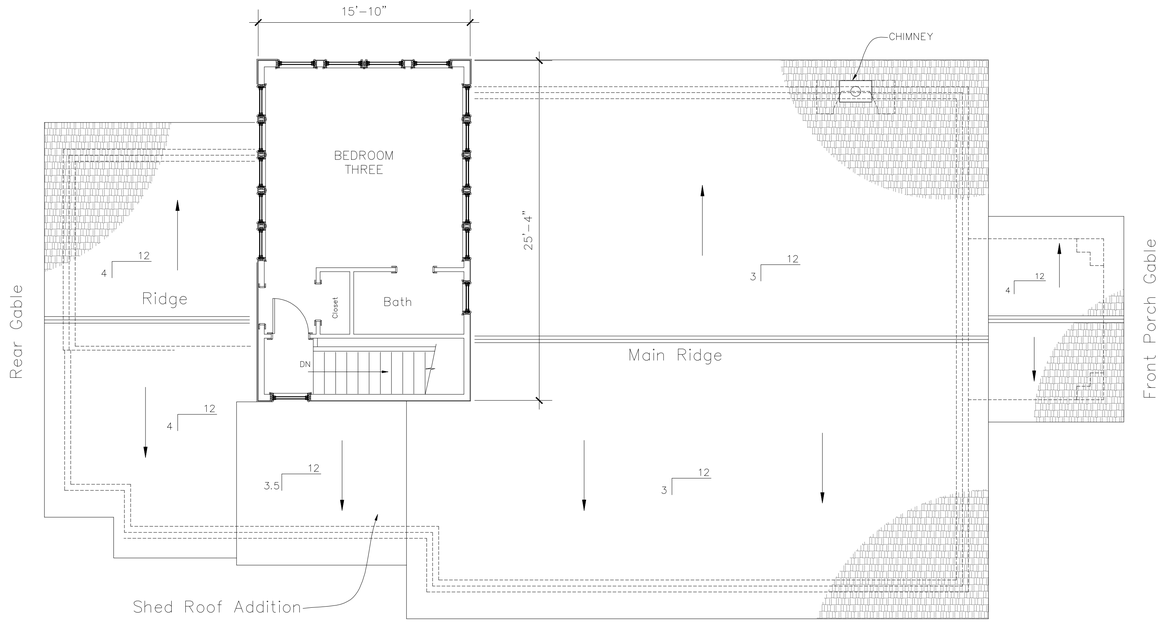

B
A-1.01

EXISTING SECOND FLOOR PLAN

Scale: 3/16" = 1'-0"

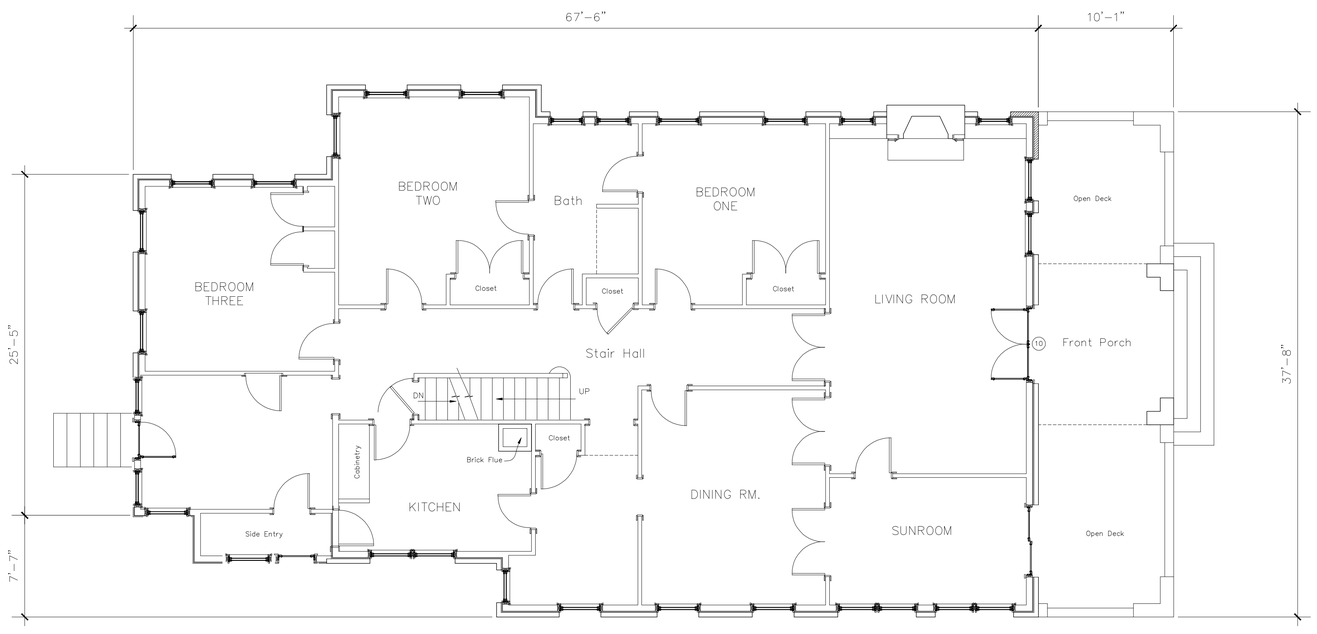

A
A-1.01

EXISTING MAIN FLOOR PLAN

Scale: 3/16" = 1'-0"

SQUARE FOOTAGE	
HEAT/COOLED SPACE	
FIRST FLOOR	2332
SECOND FLOOR	400
TOTAL	2732
PORCHES	
COVERED FRONT PORCH	120
TOTAL UNDER ROOF	2852

MULLIN ARCHITECTS

P.O.Box 18328
Pensacola, Florida 32523
marty@mullinarchitects.com
Phone: 850-857-9925

THIS DRAWING IS THE PROPERTY OF THE ARCHITECT AND MAY NOT BE USED OR REPRODUCED WITHOUT HIS WRITTEN PERMISSION. COPYRIGHT © 2013 BY MULLIN ARCHITECTS, LLC

MICK RESIDENCE

HISTORIC RESTORATION

1015 NORTH REUS STREET
PENSACOLA, FLORIDA

FOR:

REV:	DATE:

Design Development

February 28, 2024

Existing Floor Plans

A-1.01

DEMOLITION NOTES:

D-1 REMOVE DOOR AND WALL FOR NEW OPENING, SEE SCHEDULES.
D-2 REMOVE DOOR UNITS ONLY FOR CASED OPENING,
D-3 REMOVE WINDOW UNITS AND WALL CONSTRUCTION BELOW FOR NEW DOOR OPENING. SEE ELEVATIONS AND SCHEDULES
D-4 REMOVE WINDOW UNITS FOR NEW, SEE SCHEDULES
D-5 REMOVE SLIDING DOOR UNIT AND WALL SECTIONS FOR NEW CONSTRUCTION, SEE EXTERIOR ELEVATIONS & SCHEDULES.
D-6 REMOVE WALL FOR NEW CASED OPENING
D-7 REMOVE BRICK WALL FOR NEW DUCT CHASE
D-8 REMOVE INTERIOR WALL AND CABINETRY
D-9 REMOVE EXTERIOR DOOR COMPLETE FOR NEW CONSTRUCTION
D-10 REMOVE KITCHEN CABINETRY FOR NEW CONSTRUCTION
D-11 REMOVE DOOR OPENING FOR NEW CONSTRUCTION
D-12 REMOVE CABINET NICHE AT INTERIOR WALL
D-13 REMOVE EXTERIOR WALL, WINDOWS, DOORS COMPLETE FOR ALL NEW CONSTRUCTION
D-14 REMOVE WALL, WINDOW AND DOOR OPENINGS COMPLETE
D-15 REMOVE CLOSET CABINETRY FOR NEW CONSTRUCTION
D-16 CUT EXISTING WALL FOR NEW CONSTRUCTION OPENING
D-17 REMOVE CLOSET WALLS
D-18 REMOVE DOORS FOR NEW CONSTRUCTION
D-19 REMOVE CLOSET WALLS

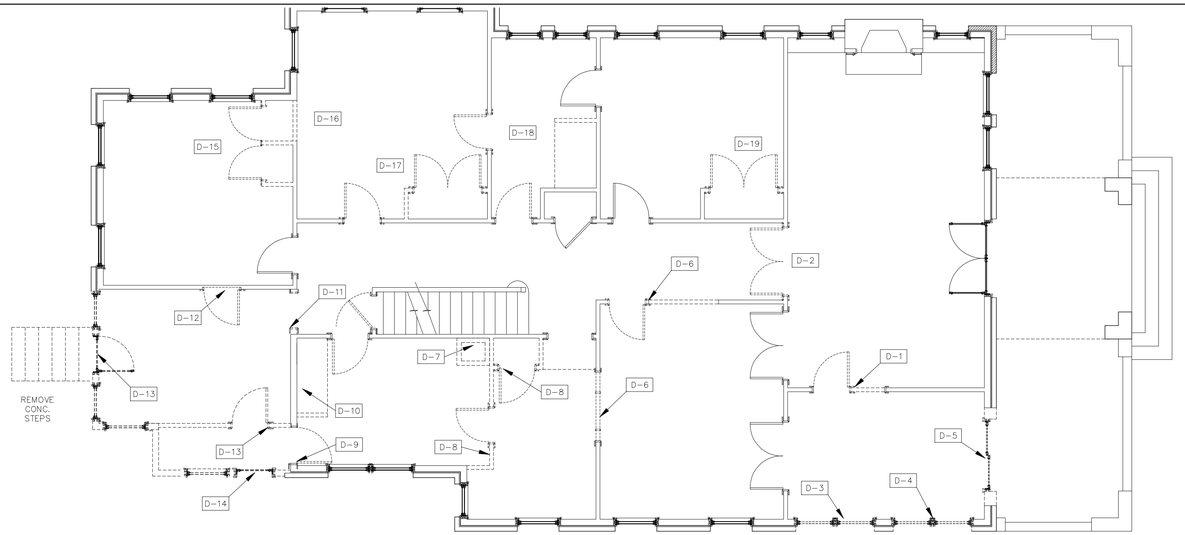

DEMOLITION PLAN

CONSTRUCTION NOTES:

C-1 PREPARE EXISTING CABINET BASE FOR NEW FINISHES, OPERABLE DOORS, HARDWARE, ETC.
C-2 RESTORE EXISTING MANTLE AND ADD NEW FINISHES, SEE DETAILS
C-3 INSTALL NEW STONE HEARTH, COORDINATE WITH FINISH FLOOR.
C-4 NEW INTERIOR DOOR OPENING SIZE, SEE SCHEDULES
C-5 NEW EXTERIOR DOOR OPENING AT EXISTING WINDOW LOCATION, SEE DOOR SCHEDULE.
C-6 NEW FRONT WINDOWS AND BRICK WALL TO MATCH OPPOSITE SIDE, SEE EXTERIOR ELEVATIONS.
C-7 NEW WINDOW UNITS AT EXISTING BRICK OPENINGS, SEE SCHEDULE.
C-8 NEW EXTERIOR BRICK LANDING, SEE DETAILS
C-9 NEW CASED OPENING SIZES, SEE SCHEDULES
C-10 NEW CABINETRY AND BENCH CONSTRUCTION, SEE INTERIORS
C-11 NEW PARTITION WALLS FOR DUCT CHASE FROM BASEMENT
C-12 ALL NEW CABINETRY, COUNTER TOPS, APPLIANCES, ETC. SEE INTERIORS
C-13 PREPARE INTERIOR STAIRS (RISERS, TREADS, BALUSTRADE, ETC. FOR NEW FINISHES.
C-14 NEW MUDROOM AREA WITH CABINETRY, SEE INTERIORS
C-15 NEW INTERIOR WALL PARTIONS FOR LAUNDRY ROOM AND PANTRY, SEE INTERIORS.
C-16 NEW EXTERIOR WALL CONSTRUCTION AT EXISTING FOUNDATION
C-17 NEW EXTERIOR ENTRY DECK AND STEPS TO GRADE.
C-18 NEW CASED OPENING AT EXISTING WALL
C-19 NEW PARTITION WALLS FOR W.I.C. AREA
C-20 NEW PARTITION WALLS FOR MASTER BATH AREA
C-21 NEW M. BATH CABINETRY, COUNTER TOPS AND PLUMBING FIXTURES. SEE INTERIORS
C-22 NEW SHOWER AREA, CABINETRY, COUNTER TOPS, FIXTURES, ETC. SEE INTERIORS
C-23 NEW CLOSET AND DESK SITTING AREA.

CONSTRUCTION NOTES:

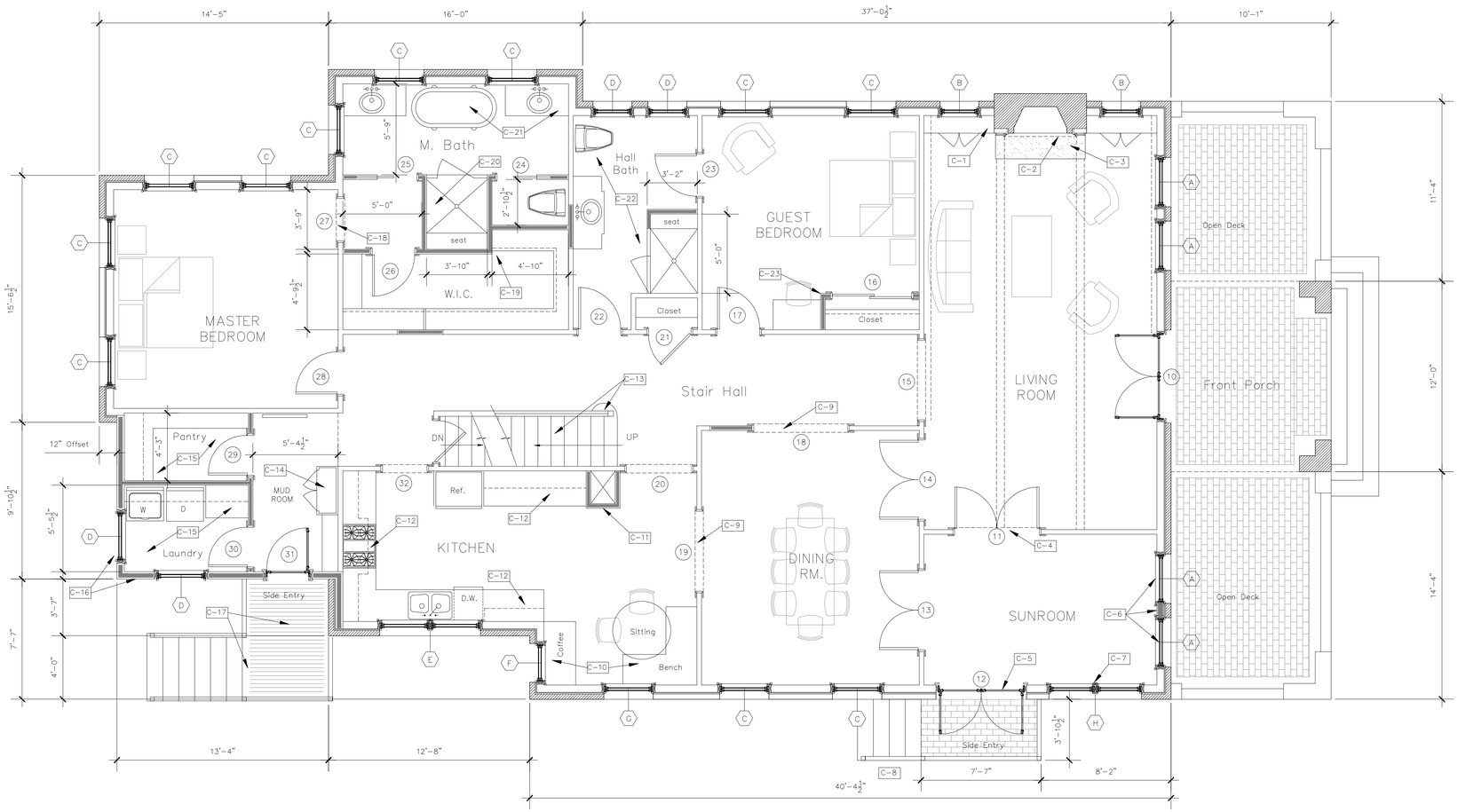

PROPOSED MAIN FLOOR PLAN

A-1.02

Scale: 1/4" = 1'-0"

SQUARE FOOTAGE

HEAT/COOLED SPACE	
FIRST FLOOR	2332
SECOND FLOOR	400
TOTAL	2732
PORCHES	
COVERED FRONT PORCH	120
TOTAL UNDER ROOF	2852

MULLIN ARCHITECTS
P.O.Box 18328
Pensacola, Florida 32523
marty@mullinarchitects.com
Phone: 850-857-9925

THIS DRAWING IS THE PROPERTY OF THE ARCHITECT AND MAY NOT BE USED OR REPRODUCED WITHOUT HIS WRITTEN PERMISSION. COPYRIGHT – 2013 BY MULLIN ARCHITECTS, LLC

MICK RESIDENCE

HISTORIC RESTORATION

1015 NORTH REUS STREET
PENSACOLA, FLORIDA

FOR:

REV:	DATE:

Design Development

February 28, 2024

Main Floor Plan

A-1.02

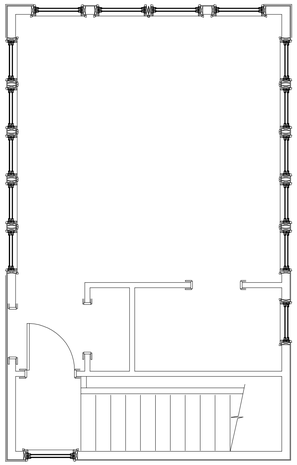

CONSTRUCTION NOTES:

C–30 ALL NEW SHOWER, CABINETRY AND FITTINGS
C–31 NEW FINISHES AT STAIR TREADS, RISERS AND GUARD RAILING
C–32 NEW DOOR UNITS, SEE SCHEDULES

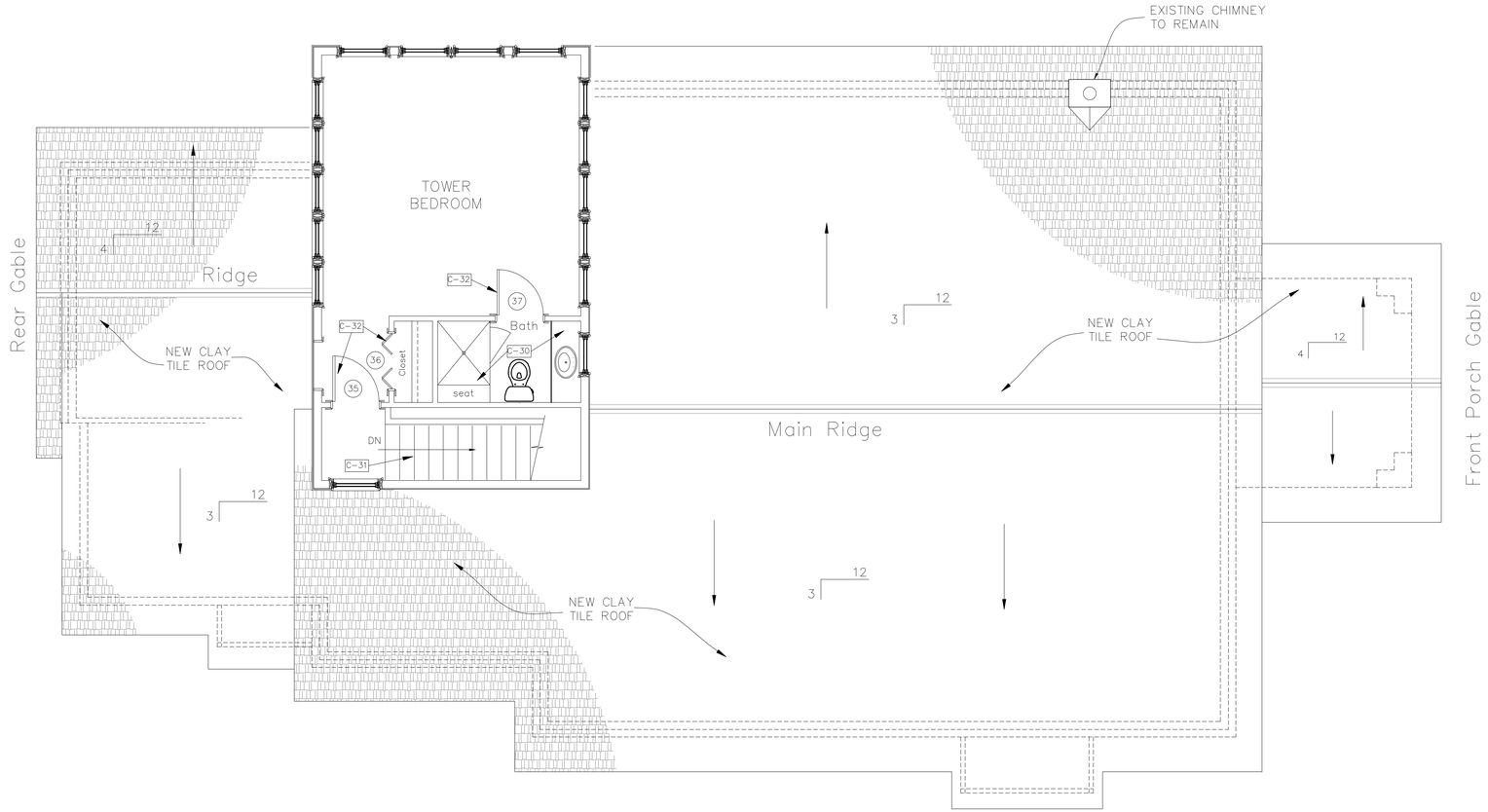

A
A-1.03

PROPOSED SECOND FLOOR PLAN

Scale: 1/4" = 1'-0"

MULLIN ARCHITECTS

P.O.Box 18328
Pensacola, Florida 32523
marty@mullinarchitects.com
Phone: 850-857-9925

THIS DRAWING IS THE PROPERTY OF THE ARCHITECT AND MAY NOT BE USED OR REPRODUCED WITHOUT HIS WRITTEN PERMISSION. COPYRIGHT – 2013 BY MULLIN ARCHITECTS, LLC

MICK RESIDENCE
HISTORIC RESTORATION
1015 NORTH REUS STREET
PENSACOLA, FLORIDA

FOR:

REV:	DATE:

Design Development

February 28, 2024

Second Floor Plan

A-1.03

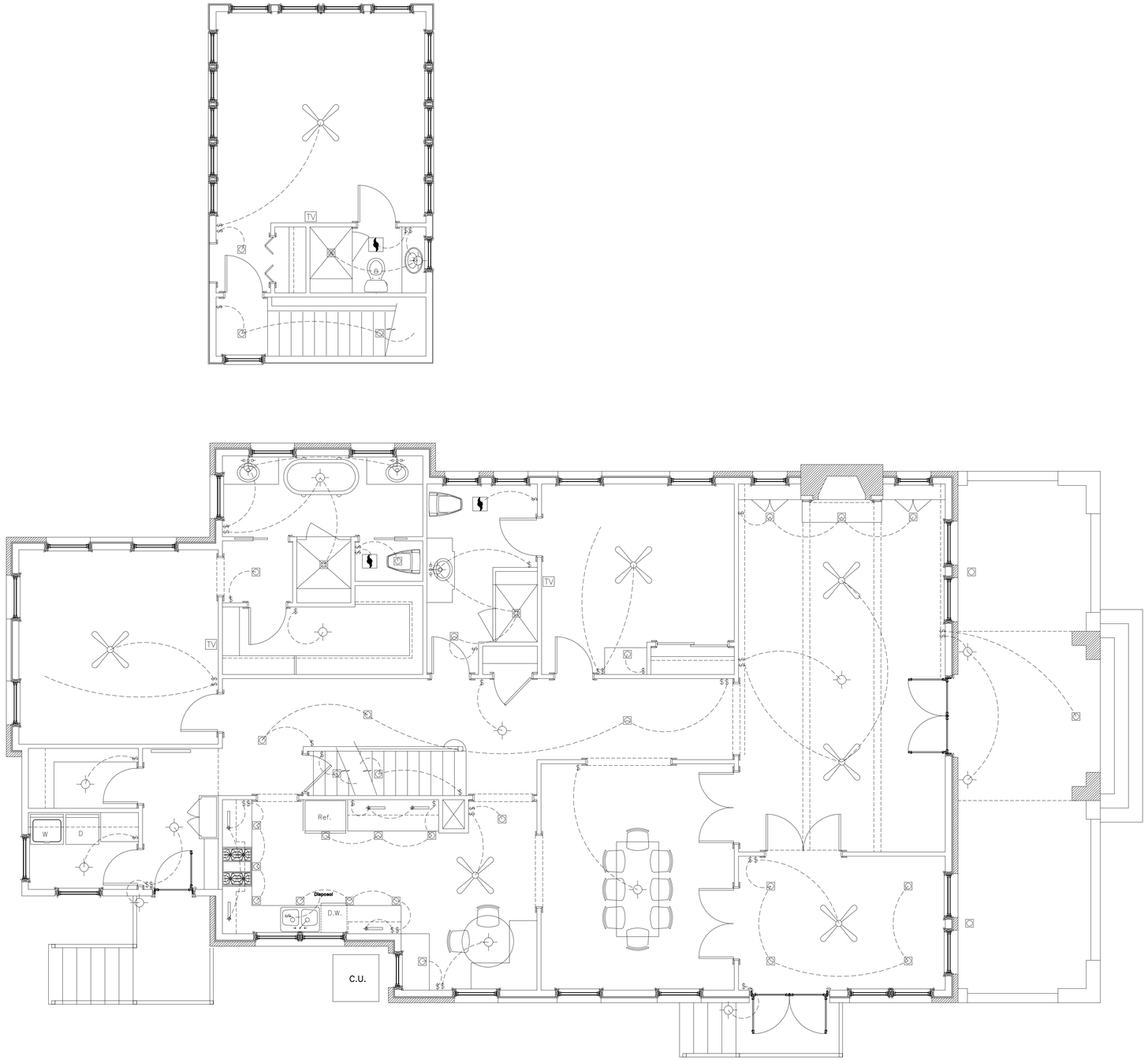

A
A-1.04
POWER & LIGHTING PLAN
Scale: 1/4" = 1'-0"

LEGEND

- RECESSED PANEL
- DISCONECT SWITCH
- EXHAUST FAN
- SINGLE POLE TOGGLE SWITCH
- 3-WAY TOGGLE SWITCH
- SWITCH W/ DIMMER
- DUPLEX RECEPTACLE
- RECEPTACLE HALF SWITCH
- GFI GROUND FAULT RECEPTACLE
- WP WEATHER PROOF RECEPTACLE
- TELEPHONE OUTLET
- C COMPUTER OUTLET
- TV TELEVESION CABLE OUTLET
- FLUORESCENT LIGHT FIXTURE
- RECESSED CAN LIGHT FIXTURE
- WALL MOUNTED LIGHT FIXTURE
- SURFACE MOUNTED CLG. LIGHT FIXTURE
- S SMOKE DETECTOR

MULLIN ARCHITECTS

P.O.Box 18328
Pensacola, Florida 32523
marty@mullinarchitects.com
Phone: 850-857-9925

THIS DRAWING IS THE PROPERTY OF THE ARCHITECT AND MAY NOT BE USED OR REPRODUCED WITHOUT HIS WRITTEN PERMISSION. COPYRIGHT - 2013 BY MULLIN ARCHITECTS, LLC

MICK RESIDENCE
HISTORIC RESTORATION
1015 NORTH REUS STREET
PENSACOLA, FLORIDA

FOR:

REV:	DATE:

Design Development

February 28, 2024

Power & Lighting Plan

A-1.04











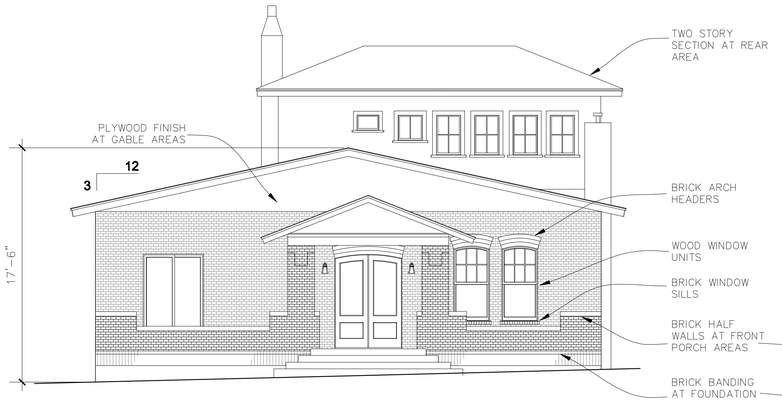

A EXISTING FRONT ELEVATION
A-2.00 Scale: 3/16" = 1'-0"

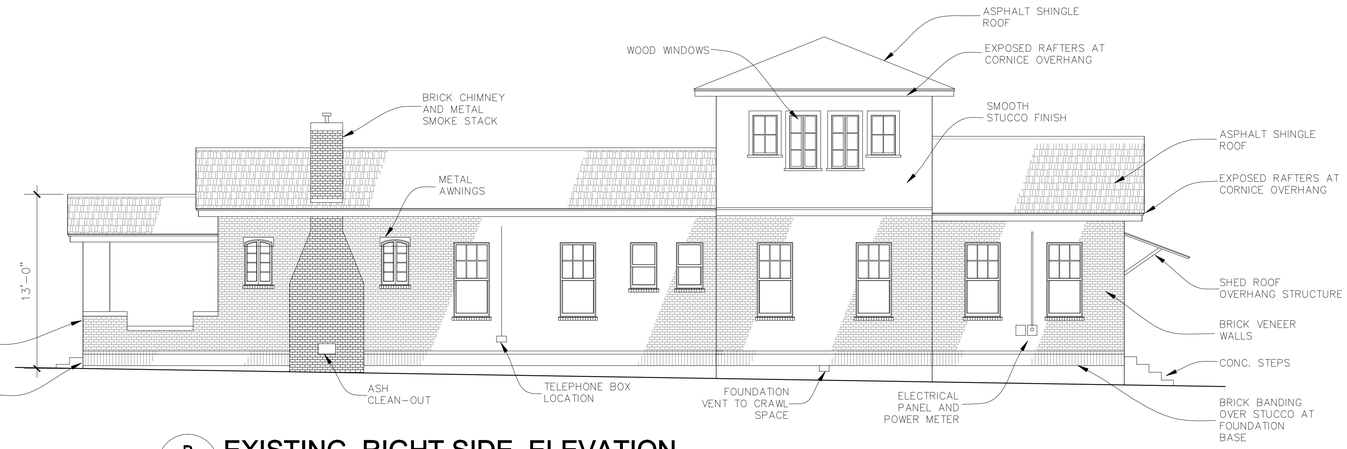

B EXISTING RIGHT SIDE ELEVATION
A-2.00 Scale: 3/16" = 1'-0"



C EXISTING REAR ELEVATION
A-2.00 Scale: 3/16" = 1'-0"

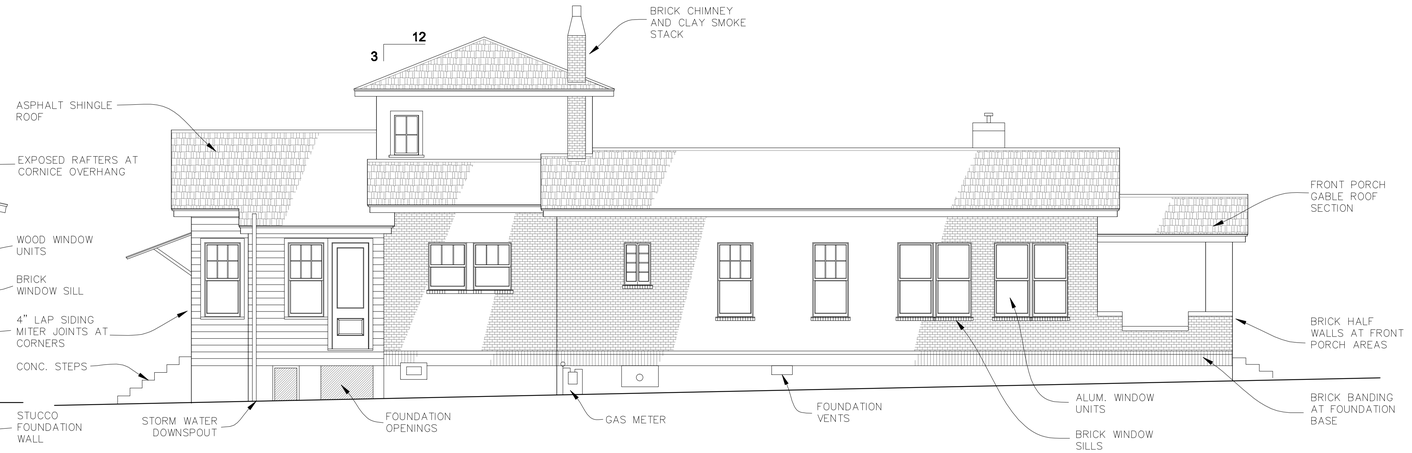

D EXISTING LEFT SIDE ELEVATION
A-2.00 Scale: 3/16" = 1'-0"

MULLIN ARCHITECTS

P.O.Box 18328
Pensacola, Florida 32523
marty@mullinarchitects.com
Phone: 850-857-9925

THIS DRAWING IS THE PROPERTY OF THE ARCHITECT AND MAY NOT BE USED OR REPRODUCED WITHOUT HIS WRITTEN PERMISSION. COPYRIGHT – 2013 BY MULLIN ARCHITECTS, LLC

MICK RESIDENCE
HISTORIC RESTORATION
1015 NORTH REUS STREET
PENSACOLA, FLORIDA

FOR:

REV:	DATE:

Design Development

February 28, 2024

Exterior Elevations

A-2.00

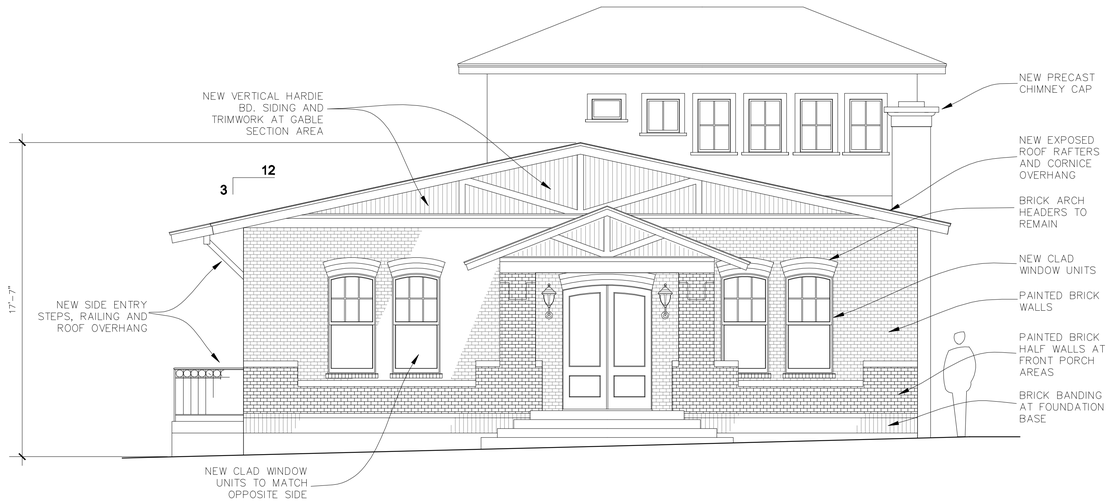

A
A-2.01

PROPOSED FRONT ELEVATION

Scale: 1/4" = 1'-0"

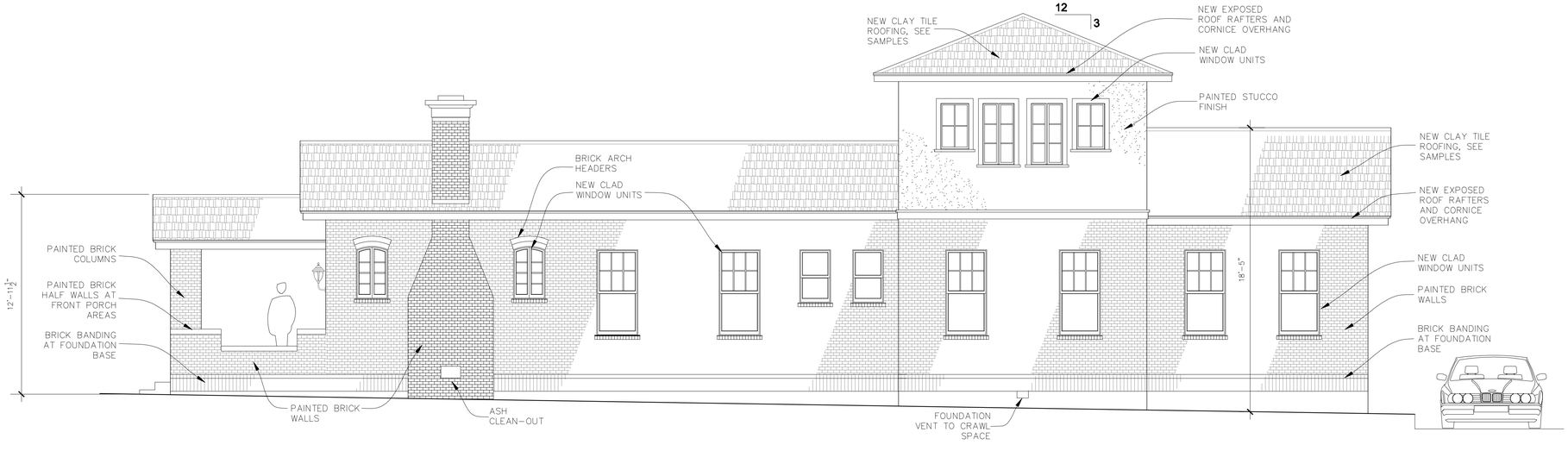

B
A-2.01

PROPOSED RIGHT SIDE ELEVATION

Scale: 1/4" = 1'-0"

MULLIN ARCHITECTS

P.O.Box 18328
Pensacola, Florida 32523
marty@mullinarchitects.com
Phone: 850-857-9925

THIS DRAWING IS THE PROPERTY OF THE ARCHITECT AND MAY NOT BE USED OR REPRODUCED WITHOUT HIS WRITTEN PERMISSION. COPYRIGHT – 2013 BY MULLIN ARCHITECTS, LLC

MICK RESIDENCE

HISTORIC RESTORATION

1015 NORTH REUS STREET
PENSACOLA, FLORIDA

FOR:

REV:	DATE:

Design Development

February 28, 2024

Proposed Elevations

A-2.01

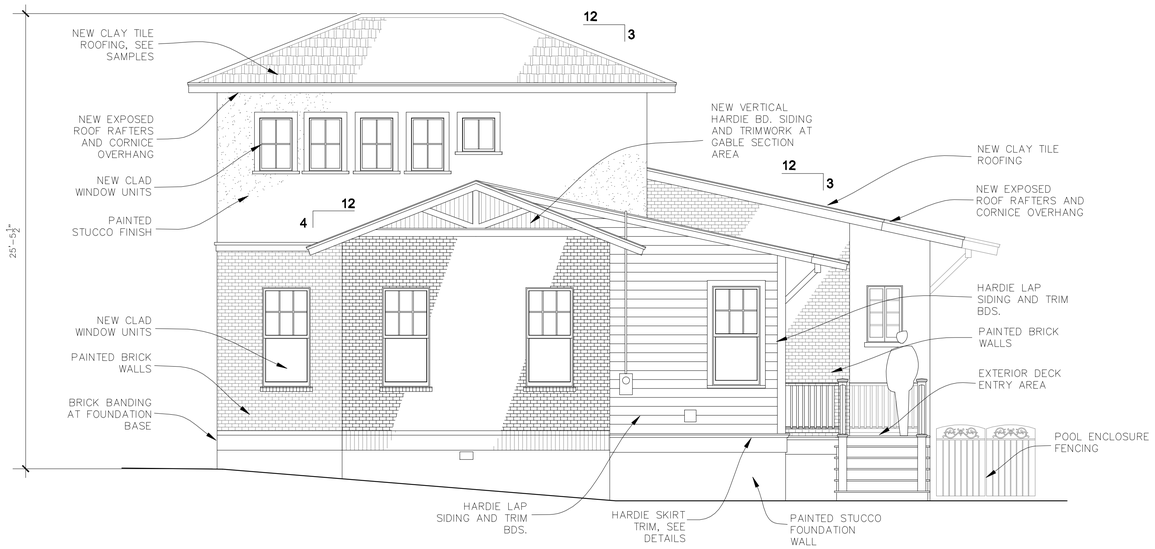

A
A-2.02
PROPOSED REAR ELEVATION
Scale: 1/4" = 1'-0"

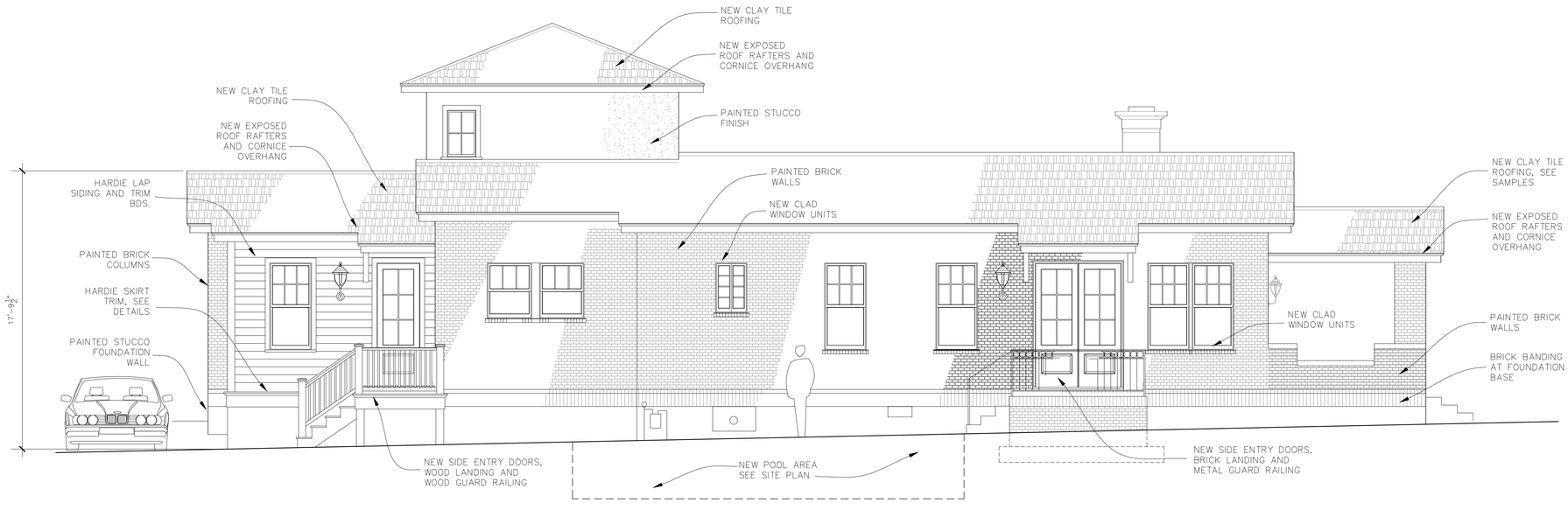

B
A-2.01
PROPOSED LEFT SIDE ELEVATION
Scale: 1/4" = 1'-0"

MULLIN ARCHITECTS

P.O.Box 18328
Pensacola, Florida 32523
marty@mullinarchitects.com
Phone: 850-857-9925

THIS DRAWING IS THE PROPERTY OF THE ARCHITECT AND MAY NOT BE USED OR REPRODUCED WITHOUT HIS WRITTEN PERMISSION. COPYRIGHT – 2013 BY MULLIN ARCHITECTS, LLC

MICK RESIDENCE
HISTORIC RESTORATION
1015 NORTH REUS STREET
PENSACOLA, FLORIDA

FOR:

REV:	DATE:

Design Development

February 28, 2024

Proposed Elevations

A-2.02

City of Pensacola

222 West Main Street
Pensacola, FL 32502

Memorandum

File #: 24-289 | Architectural Review Board | 3/21/2024

LEGISLATIVE ACTION ITEM

SUBJECT:

226 E. Government Street
Pensacola Historic District / Zone HC-1 / City Council District 6
Final Approval for Site Plan and Carport at a Contributing Structure

SUMMARY:

Ashley King is seeking final approval for the site plan and carport for a contributing structure. Changes to the site plan from the previous version include an outdoor restroom and expanded hardscaping. The carport will be translucent solar panels supported by heavy timber columns and beams, connected to the primary structure by a covered walkway with a simplified version of the column style on the primary. The walkway roof will be TPO to match the low slope sections of the main roof material. The applicant is seeking conceptual approval of the pool location, size, and relationship to the structure. Landscaping, fence details, and site lighting will be submitted at a later date.

RECOMMENDED CODE SECTIONS
Sec. 12-3-10(1)d.2.i-ii.(a)(b) Pensacola Historic District; Procedure for review; Decisions; General considerations and Rules governing decisions.
Sec. 12-3-10(1)f.1. PHD; Restoration, rehabilitation, alterations or additions to existing contributing structures in the historic district; Exterior lighting.
Sec. 12-3-10(1)f.3. PHD; Restoration, rehabilitation, alterations or additions to existing contributing structures in the historic district; Roofs.
Sec. 12-3-10(1)h. PHD; New construction in the historic district.

ATTACHMENTS:

1. Florida Master Site File Form
2. Images
3. Application and Materials

HISTORICAL STRUCTURE FORM
FLORIDA SITE FILE
Version 2.0 7/92

X Original
X Update

Site #8 ES 2397
Recorder #
Field Date 5 / 2 /95
Form Date 7 / 14 /95

SITE NAMES (addr. if none) BENJAMIN OVERMAN HOUSE [MULT. LIST. #8]
SURVEY PENSACOLA HISTORIC DISTRICT [SURVEY # 4748]
NATIONAL REGISTER CATEGORY X building _structure X district _site _object

LOCATION & IDENTIFICATION

ADDRESS (Include N,S,E,W; st., ave., etc.) 226 E. GOVERNMENT ST.
CROSS STREETS nearest/between BETW. S. TARRAGONA AND S. ALCANIZ ST.
NEAREST CITY/TOWN PENSACOLA IN CURRENT CITY LIMITS X yes no
COUNTY ESCAMBIA TAX PARCEL # 9001-001-299
SUBDIVISION NAME PENSACOLA HIST DIST BLOCK 23 LOT NO. 167
OWNERSHIP X private-profit _priv-nonprofit _priv-indiv _priv-unspecified _city _county _state _federal _unknown
NAME OF PUBLIC TRACT (e.g., park) OLD CITY TRACT
ROUTE TO

MAPPING

USGS 7.5' MAP NAME 30087-D2-TF-024 1987
TOWNSHIP 2S RANGE 30W SECT. 46 1/4 1/4-1/4 IRREG. SECT.? y n
[UTM: ZONE 16 17 EASTING | | | | | | 0 | NORTHING | | | | | | 0]
PLAT OR OTHER MAP (Map's name, location)

DESCRIPTION

STYLE ITAL EXTERIOR PLAN LSHP NO. STORIES 2.5
STRUCTURAL SYSTEMS WF
FOUNDATION: Types PIER Materials BRIC
EXTERIOR FABRICS WTBD
ROOF: Types GAIN Materials SM3V
Secondary strucs. (dormers etc.) CRGA
CHIMNEY : No.___ Materials LOCATIONS
WINDOWS (types, materials, and placements) DHS, 4/4, 4/6, 6/6, WOOD, FIXED, 4 LIGHT, WOOD AND PEDIMENTED WINDOW SURROUNDS AND LOUVERED SHUTTERS

MAIN ENTRANCE (stylistic details)
PORCHES: #open #closed #incised Locations S/ 1 STORY SHED WITH BRACKETS
Porch roof types SQUARE POSTS AND SPINDLE AND SPOOL BALLUSTERS, 3 BAY, ACCESS FROM SOUTH
EXTERIOR ORNAMENT BRACKETED CORNICE WITH PANEL FRIEZE

INTERIOR PLAN CONDITION: _excellent X good _fair _deteriorated _ruinous
SURROUNDINGS (N-None, S-Some, M-Most, A-All or nearly all) S commercial _residential _institutional _rural
ANCILLARY FEATURES (No., type of outbuildings; major landscape features)

ARCHAEOLOGICAL REMAINS AT SITE Archaeological form completed? _ y _ n (No-explain; yes-attach!)
Artifacts or other remains
NARRATIVE (E.g. description of interior, landscape, architecture, etc; please limit to 3 lines and attach full statement on separate sheet)

HISTORICAL STRUCTURE FORM

Site #8 _____

HISTORY

CONSTRUCTION DATE 1860s CIRCA X yes __no
ARCHITECT: (last name first) UNKNOWN
BUILDER: (last name first) UNKNOWN
MOVES X yes __no Dates 1978 Orig.addr. FROM E. GREGORY ST.
ALTERATIONS __yes __no Dates _____ Nature _____
ADDITIONS __yes __no Dates _____ Nature _____
ORIGINAL USES (give dates) RESIDENCE
INTERMEDIATE USES (give dates) _____
PRESENT USES (give dates) COMMERCIAL, OFFI
OWNERSHIP HISTORY (especially original owner) BENJAMIN OVERMAN (ORIGINAL), JOHN C. AND MARY E. DONOVAN (CURRENT)

SURVEYOR'S EVALUATION OF SITE

Potentially elig. for local designation? __yes __no __insuff. info
Individually elig. for Nat. Register? __yes __no __insuff. info
Potential contributor to NR district? __yes __no __insuff. info

Local Designation Category _____

HISTORICAL ASSOCIATIONS (ethnic heritage, etc.) _____

EXPLANATION OF EVALUATION (required; limit to three lines; attach full statement on separate sheet)

CROSS REFERENCES

BIBLIOGRAPHIC REFERENCES (Author, date, title, publication information. If unpublished, give FSF Manuscript Number, or location where available) _____

PHOTOGRAPHS (REQUIRED) B&W print(s) at least 3 x 5, at least one main facade. Label the back of the print with the FSF site number (site name if not available), direction and date of photograph: use pencil. Attach to back of the second to last page with a plastic or coated clip. Location of negatives/neg. nos. R4, F11-12

RECORDER

NAME (last first)/ADDR/PHONE/AFFILIATION HPPB

FOR DETAILED INSTRUCTIONS: *Guide to the 1992 Historic Structure Form of the Florida Site File.*

DHR USE ONLY	OFFICIAL EVALUATIONS	DHR USE ONLY
NR DATE / /	KEEPER-NR ELIGIBILITY*: y n pe ii	Date / /
DELIST DATE / /	SHPO-NR ELIGIBILITY*: y n pe ii	Date / /
	LOCAL DESIGNATION: _____	Date / /
	Local office _____	

* y=Yes; n=No; pe=Potentially Eligible; ii=Insufficient Information

REQUIRED:
(1) USGS MAP WITH STRUCTURE PINPOINTED
(2) LARGE SCALE STREET OR PLAT MAP
(3) PHOTO OF MAIN FACADE, PREFER B&W, AT LEAST 3X5

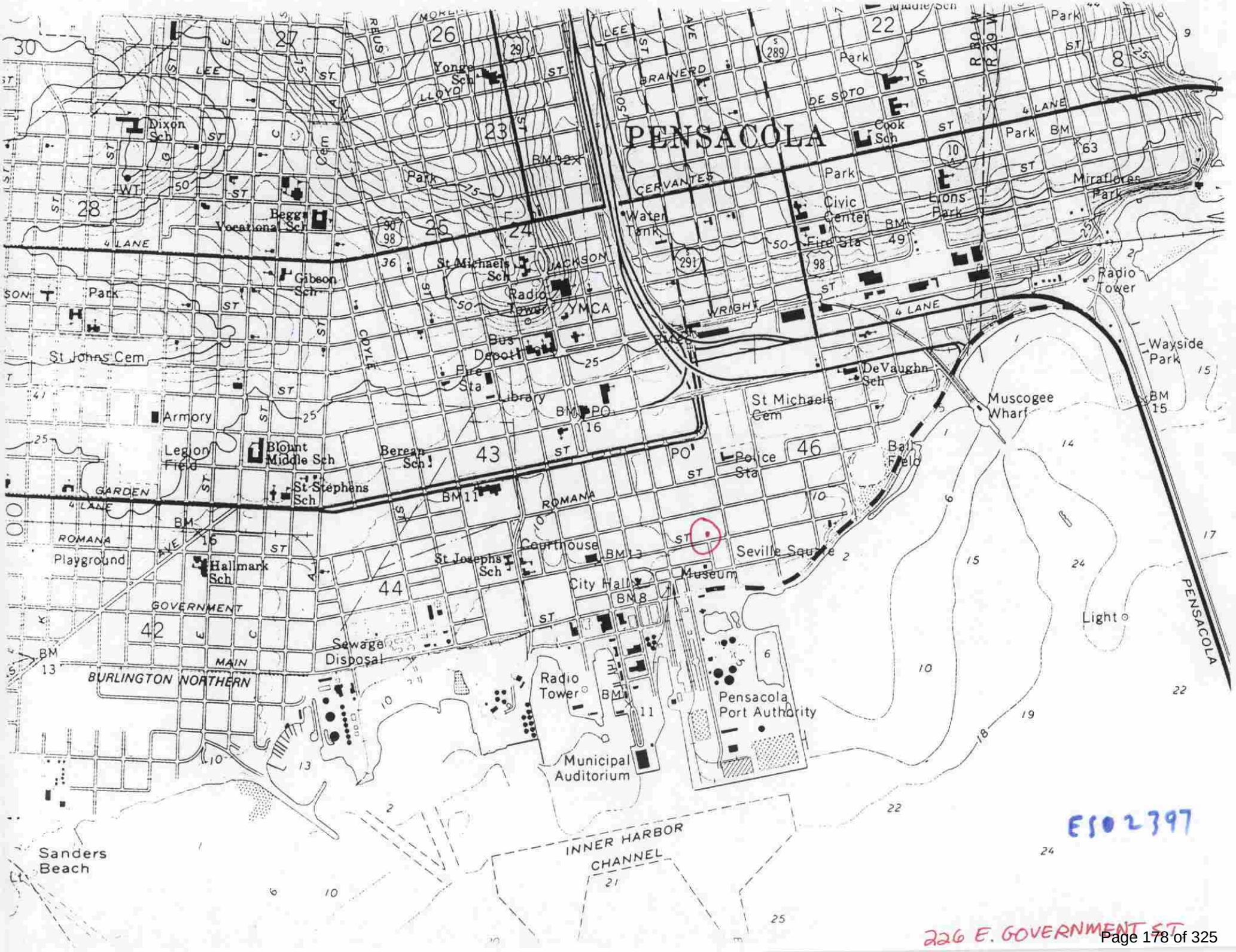

ES02797

226 E. GOVERNMENT ST



1. BENJAMIN OVERMAN HOUSE
2. 226 E. GOVERNMENT ST.
3. J. SCOTT JANCY
4. 2 MAY 1995
5. HPPB
6. N
7. R4, F11

E502397

226 E. Government Street

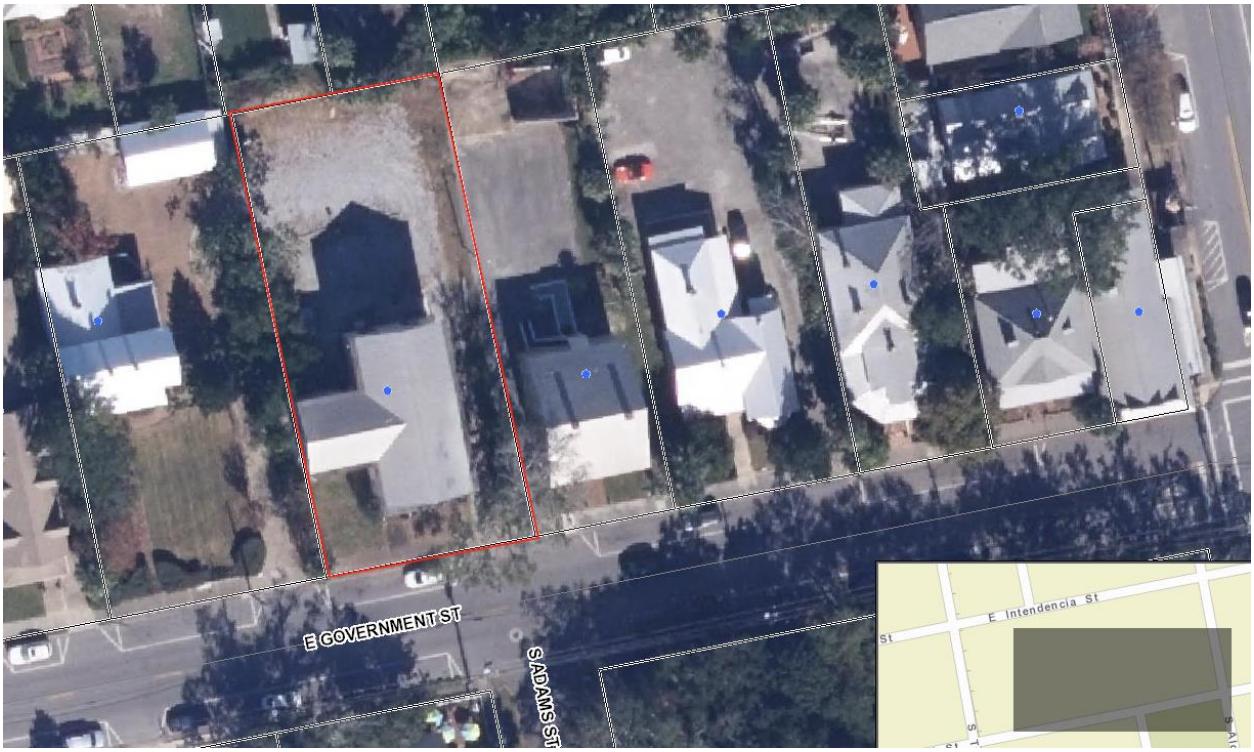



City of Pensacola
America's First Settlement And Most Historic City

Architectural Review Board Application
Full Board Review

Application Date: Feb 29, 2024

***Project Address*:** **226 E Government Street**

Applicant: Ashley King

Applicant's Address: 850 Tchoupitulas Street, New Orleans, LA 70130

Email: *aking@trapolinpeer.com* Phone: 504-215-2435

Property Owner: Robert B. and Janie A. Switzer; bobby.switzer@gmail.com
(If different from Applicant)

District: ☑ ***PHD*** ☐ ***NHPD*** ☐ ***OEHPD*** ☐ ***PHBD*** ☐ ***GCD***

Application is hereby made for the project as described herein:

☑ Residential Homestead – $50.00 hearing fee

☐ Commercial/Other Residential – $250.00 hearing fee

** An application shall be scheduled to be heard once all required materials have been submitted and it is deemed complete by the Secretary to the Board. You will need to include ten (10) copies of the required information. Please see pages 3 – 4 of this application for further instruction and information.*

***Project specifics/description*:**

Final review of site plan and carport for existing house.

The car port roof will be translucent solar panel support by heavy timber columns and beams.

The car port will be connect to the house via a walkway. The columns of the walkway will be a simplified version of the column style on the house. The roof of the walkway will be TPO to match the low slope sections of the main roof material.

We are also requesting conceptual approval of the pool location, size, and relationship to the house. Final details as well as landscaping, fencing details, and site lighting will be submitted at a later date.

I, the undersigned applicant, understand that payment of these fees does not entitle me to approval and that no refund of these fees will be made. I have reviewed the applicable zoning requirements and understand that I must be present on the date of the Architectural Review Board meeting.

Applicant Signature

03/12/2024
Date

Planning Services
222 W. Main Street * Pensacola, Florida 32502
(850) 435-1670
Mail to: P.O. Box 12910 * Pensacola, Florida 32521

ARCHITECTURAL REVIEW BOARD APPLICATION
226 E. GOVERNMENT STREET

TABLE OF CONTENTS

1. TITLE SHEET
2. VICINITY MAP
3. SURVEY
4. HISTORIC PHOTOGRAPHS
5. PHOTOGRAPHS
6. PHOTOGRAPHS
7. PHOTOGRAPHS
8. PHOTOGRAPHS
9. PREVIOUSLY APPROVED ARB DRAWINGS
   10. SITE PLAN
   11. PLANS
   12. ELEVATIONS
   13. ELEVATIONS
   14. ELEVATIONS
   15. ELEVATIONS
   16. PERSPECTIVES
   17. PERSPECTIVES
18. PAINT COLORS
19. EXTERIOR LIGHTS
20. 1ST FLOOR RCP/ELECTRICAL
21. 2ND FLOOR RCP/ELECTRICAL
22. EXTERIOR RAILING
23. SITE PLAN
24. CARPORT & WALKWAY PLANS AND DETAILS



MAP OF VICINITY

MERRILL PARKER SHAW, INC.

4928 N. DAVIS HWY — PROFESSIONAL SURVEYING SERVICES — PH: (850) 478-4923
PENSACOLA, FL 32503 — FAX: (850) 478-4924

PREPARED FOR: ROBERT B. SWITZER & JEREMY T. SWITZER
REQUESTED BY: BILLY LOVELACE

JOB NO.: 19-11859-S-1
DATE: 09/12/19

PROPERTY ADDRESS: 226 E. GOVERNMENT STREET

SCALE: 1" = 30'

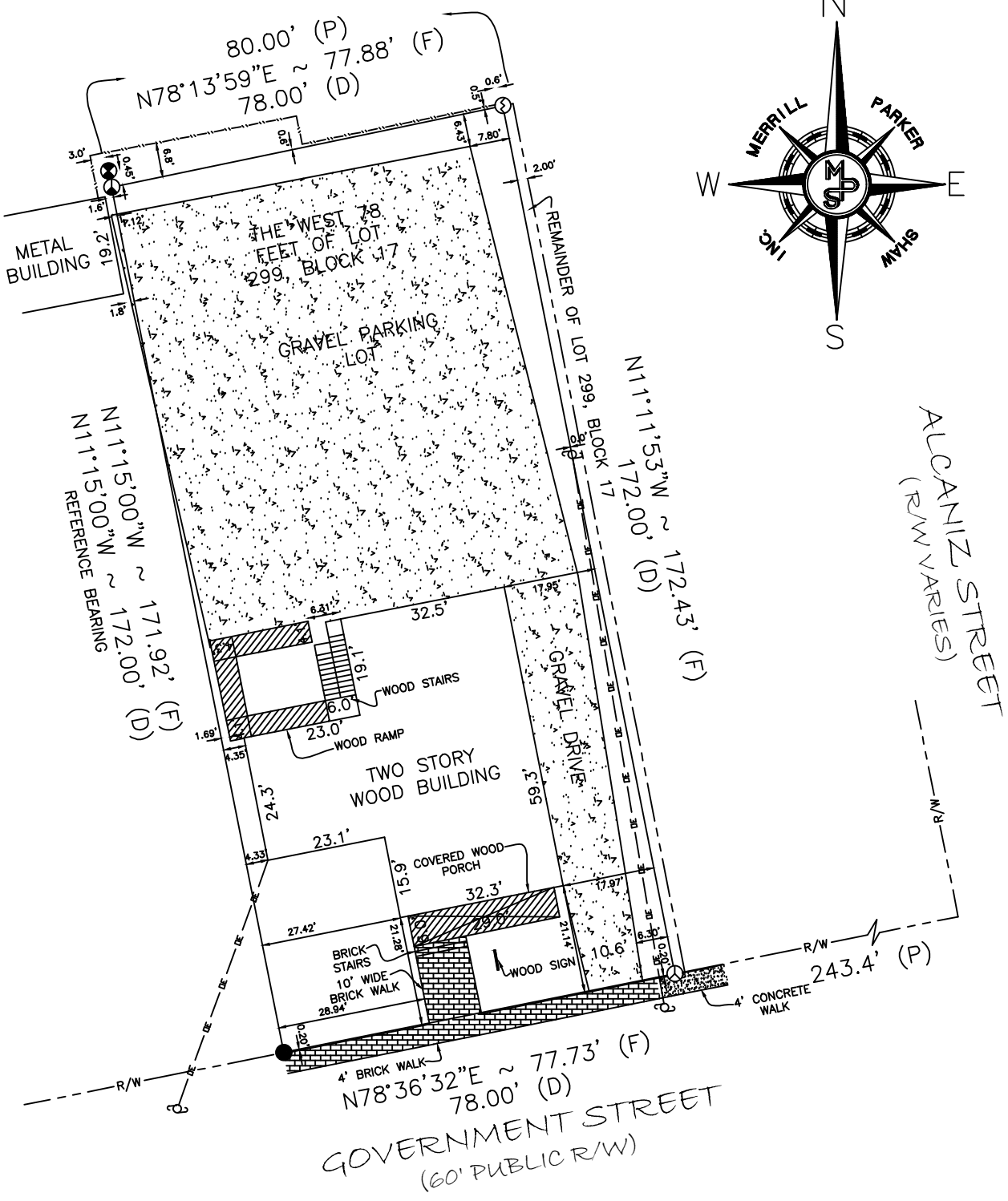

SURVEYOR'S NOTES:

1.) THE NORTH ARROW AND BEARINGS AS SHOWN HEREON ARE REFERENCED TO THE ASSUMED BEARING OF NORTH 11 DEGREES 15 MINUTES 00 SECONDS WEST BOUNDARY LINE OF THE SUBJECT PROPERTY, ACCORDING TO MAP OF THE CITY OF PENSACOLA, COPYRIGHTED BY THOMAS C. WATSON IN 1906, ESCAMBIA COUNTY, FLORIDA.

2.) SOURCE OF INFORMATION: MAP OF THE CITY OF PENSACOLA, COPYRIGHTED BY THOMAS C. WATSON IN 1906, ESCAMBIA COUNTY, FLORIDA; AND EXISTING FIELD MONUMENTATION.

3.) NO TITLE SEARCH WAS PERFORMED BY OR FURNISHED TO MERRILL PARKER SHAW, INC. FOR THE SUBJECT PROPERTY. THERE MAY BE DEEDS OF RECORD, UNRECORDED DEEDS, RIGHT-OF-WAYS, EASEMENTS, BUILDING SETBACKS, RESTRICTIVE COVENANTS, GOVERNMENTAL JURISDICTIONAL AREAS OR OTHER INSTRUMENTS WHICH COULD AFFECT THE BOUNDARIES AND/OR USE OF THE SUBJECT PROPERTY.

4.) ONLY THE ABOVE GROUND VISIBLE ENCROACHMENTS AND IMPROVEMENTS WERE FIELD LOCATED AS SHOWN HEREON, UNLESS OTHERWISE NOTED. UNDERGROUND ENCROACHMENTS AND IMPROVEMENTS, IF ANY, WERE NOT FIELD LOCATED OR VERIFIED, UNLESS OTHERWISE NOTED.

5.) THE DIMENSIONS OF THE BUILDINGS (IF ANY) AS SHOWN HEREON ARE ALONG THE OUTSIDE FACE OF THE BUILDINGS AND DO NOT INCLUDE THE EAVES OVERHANG OR THE FOOTINGS OF THE FOUNDATIONS.

6.) THE SURVEY AS SHOWN HEREON DOES NOT DETERMINE OWNERSHIP.

7.) THE MEASUREMENTS MADE IN THE FIELD, INDICATED THUSLY (F), AS SHOWN HEREON WERE MADE IN ACCORDANCE WITH UNITED STATES STANDARDS.

8.) FEDERAL AND STATE COPYRIGHT ACTS PROTECT THIS MAP FROM UNAUTHORIZED USE. THIS MAP IS NOT TO BE COPIED OR REPRODUCED IN WHOLE OR PART AND IS NOT TO BE USED FOR ANY OTHER TRANSACTION. THIS DRAWING CANNOT BE USED FOR THE BENEFIT OF ANY OTHER PERSON, COMPANY OR FIRM WITHOUT PRIOR WRITTEN CONSENT OF THE COPYRIGHT OWNER AND IS TO BE RETURNED UPON REQUEST.

LEGEND:

- ⊗ ~ 5/8" CAPPED IRON ROD, ILLEGIBLE (FOUND)
- ◔ ~ 1/2" CAPPED IRON ROD, NUMBER 1053 (FOUND)
- ⊗ ~ 1/2" CAPPED IRON ROD, NUMBER 4802 (FOUND)
- ✇ ~ 1/2" CAPPED IRON ROD, NUMBER 7107 (FOUND)
- ● ~ 1/2" PLAIN IRON ROD, UNNUMBERED (FOUND)
- O.R. ~ OFFICIAL RECORDS
- R/W ~ RIGHT OF WAY
- B.S.L. ~ BUILDING SETBACK LINE
- (P) ~ PLATTED INFORMATION
- (F) ~ FIELD MEASUREMENT/ INFORMATION
- (D) ~ DEED / INFORMATION
- ~ INDICATES NOT TO SCALE
- OE OE OE ~ OVERHEAD ELECTRIC LINE
- ~ 6' HIGH WOOD PRIVACY FENCE
- ~ UTILITY POLE

CERTIFIED TO:

ROBERT B. SWITZER & JEREMY T. SWITZER
LITTVAK, BEASLEY, WILSON & BALL, LLP
WESTCOR LAND TITLE INSURANCE COMPANY

THAT THE SURVEY SHOWN HEREON MEETS THE FLORIDA STANDARDS OF PRACTICE SET FORTH BY THE BOARD OF PROFESSIONAL SURVEYORS & MAPPERS IN THE STATE OF FLORIDA, ACCORDING TO FLORIDA ADMINISTRATIVE CODE, CHAPTER 5J-17.051 AND 5J-17.052, PURSUANT TO CHAPTER 472.027, FLORIDA STATUES.

"BOUNDARY SURVEY WITH IMPROVEMENTS"

SHEET 1 OF 1 *MEASUREMENTS MADE TO UNITED STATES STANDARDS*

COPYRIGHT © 2019 BY MERRILL PARKER SHAW, INC.
P.C.: R.B. DRAFTED: DSP TYPED: DSP CHECKED: EWP

DESCRIPTION: THE WEST 78 FEET OF LOT 299, BLOCK 17, OLD CITY TRACT,
ACCORDING TO MAP OF CITY OF PENSACOLA, COPYRIGHTED BY THOMAS C. WATSON IN 1906, ESCAMBIA COUNTY, FLORIDA.

SECTION _____, TOWNSHIP _____, RANGE _____, ESCAMBIA COUNTY, STATE OF FLORIDA.
RECORDED O.R. BOOK 5626, PAGE 1459 *THE ENCROACHMENTS ARE AS SHOWN*
FIELD DATE: 09/10/19, FIELD BOOK: 425, PG. 98

MERRILL PARKER SHAW, INC. CORPORATION NUMBER 7174

DATE: 09/12/19

E. WAYNE PARKER PROFESSIONAL LAND SURVEYOR
FLORIDA REGISTRATION NUMBER 3683 STATE OF FLORIDA

REVISIONS:

NOT VALID WITHOUT THE SIGNATURE AND THE ORIGINAL RAISED SEAL OF A FLORIDA PROFESSIONAL LAND SURVEYOR

TRAPOLINPEER ARCHITECTS 3
CN22169 Switzer Residence/226 E. Government St., Pensacola, FL 32502
3/21/2023





PHOTOGRAPHIC DOCUMENTATION - HISTORIC PHOTOGRAPHS





PHOTOGRAPHIC DOCUMENTATION - FROM STREET



NOTE: EXTERIOR STAIR HAS BEEN SINCE REMOVED

VIEW OF NORTH SIDE OF BUILDING



VIEW OF SOUTH WEST SIDE OF BUILDING

PHOTOGRAPHIC DOCUMENTATION - EXISTING CONDITIONS



VIEW OF EAST SIDE OF BUILDING







VIEWS OF CURRENT CONDITION OF EXTERIOR ELEMENTS

PHOTOGRAPHIC DOCUMENTATION - EXISTING CONDITION

PREVIOUSLY APPROVED ARB DRAWINGS
SUBMITTED 11/17/2022

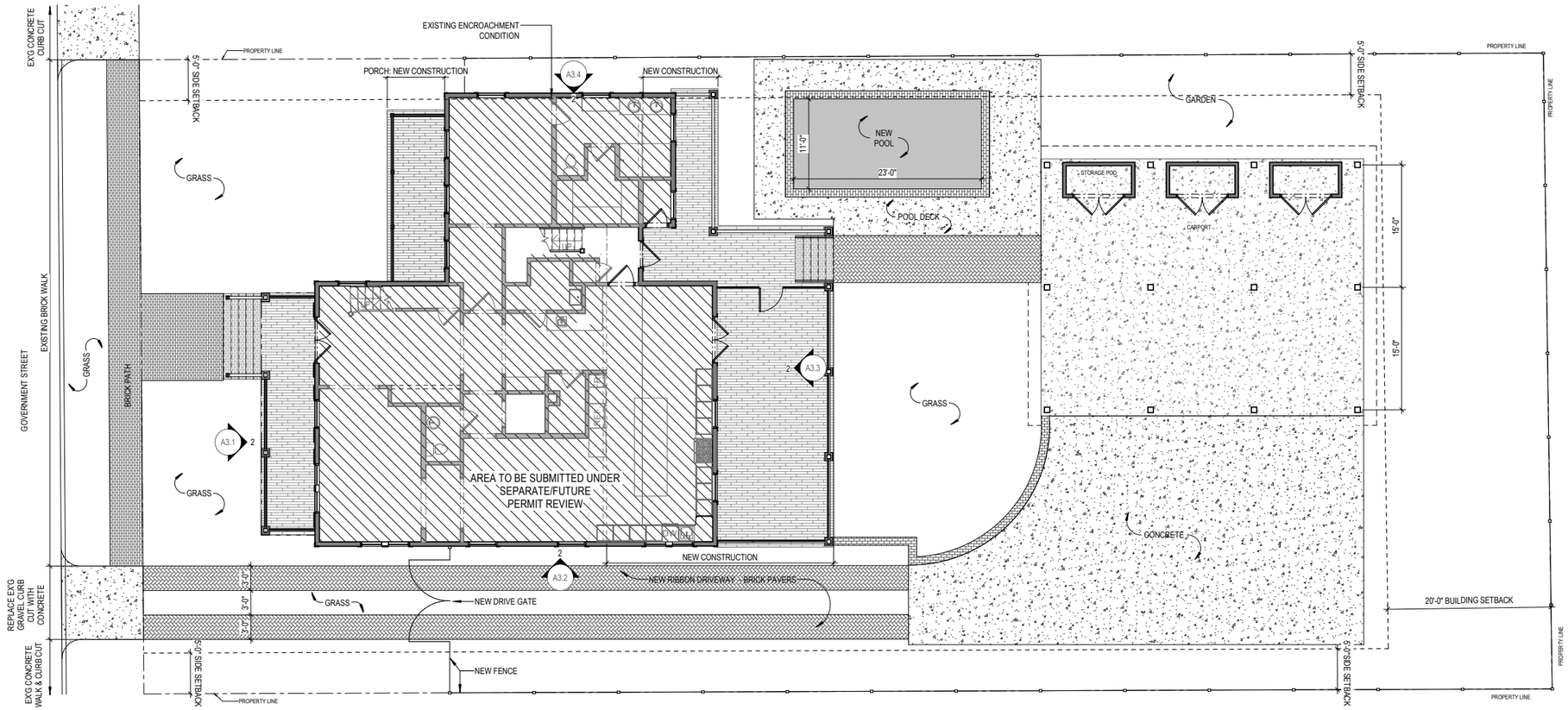

PROPOSED SITE PLAN
SCALE: 1/16" = 1'-0"







PHOTOGRAPHIC DOCUMENTATION - EXISTING ROOF

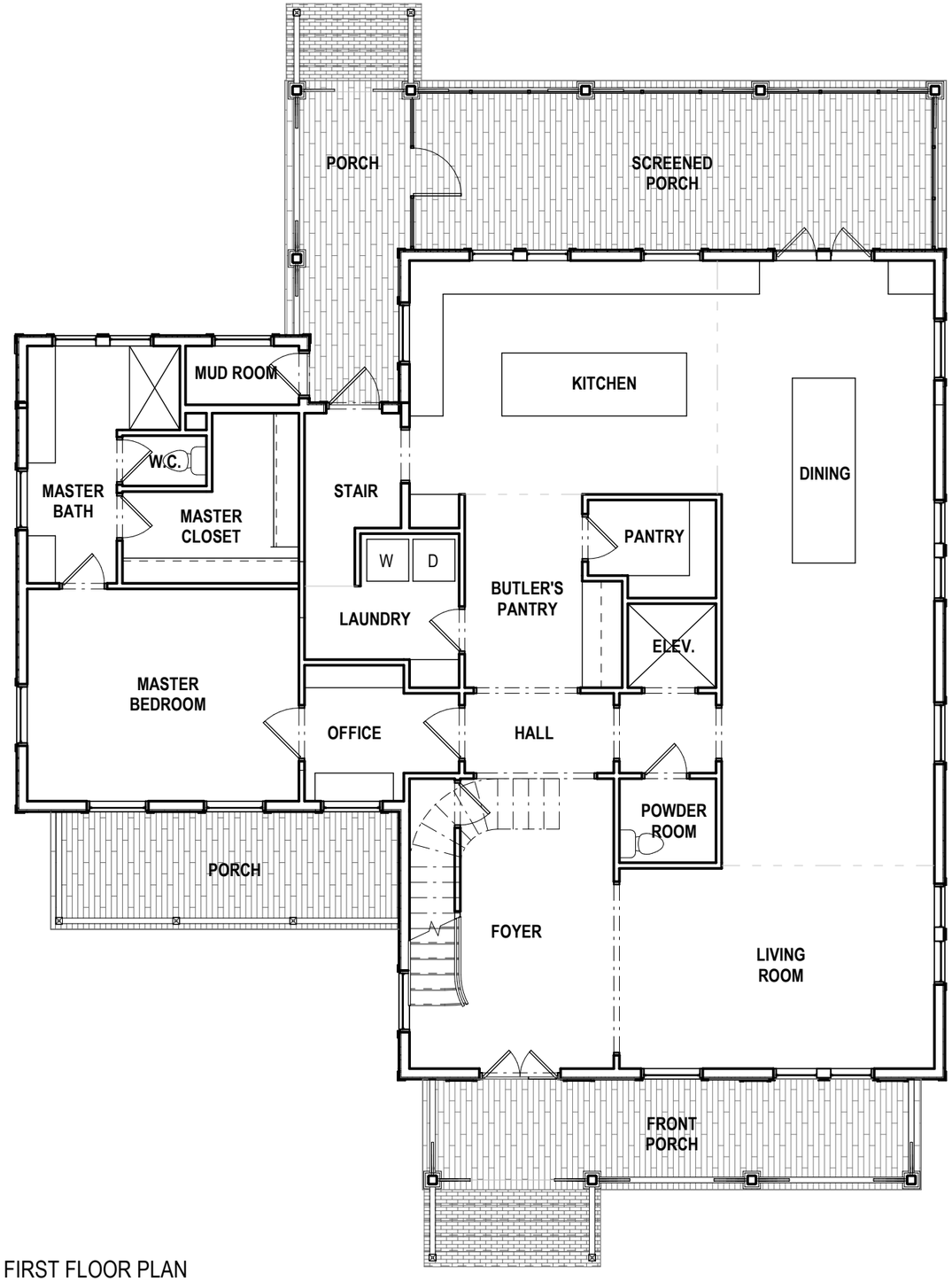

FIRST FLOOR PLAN
SCALE: 1/8" = 1'-0"

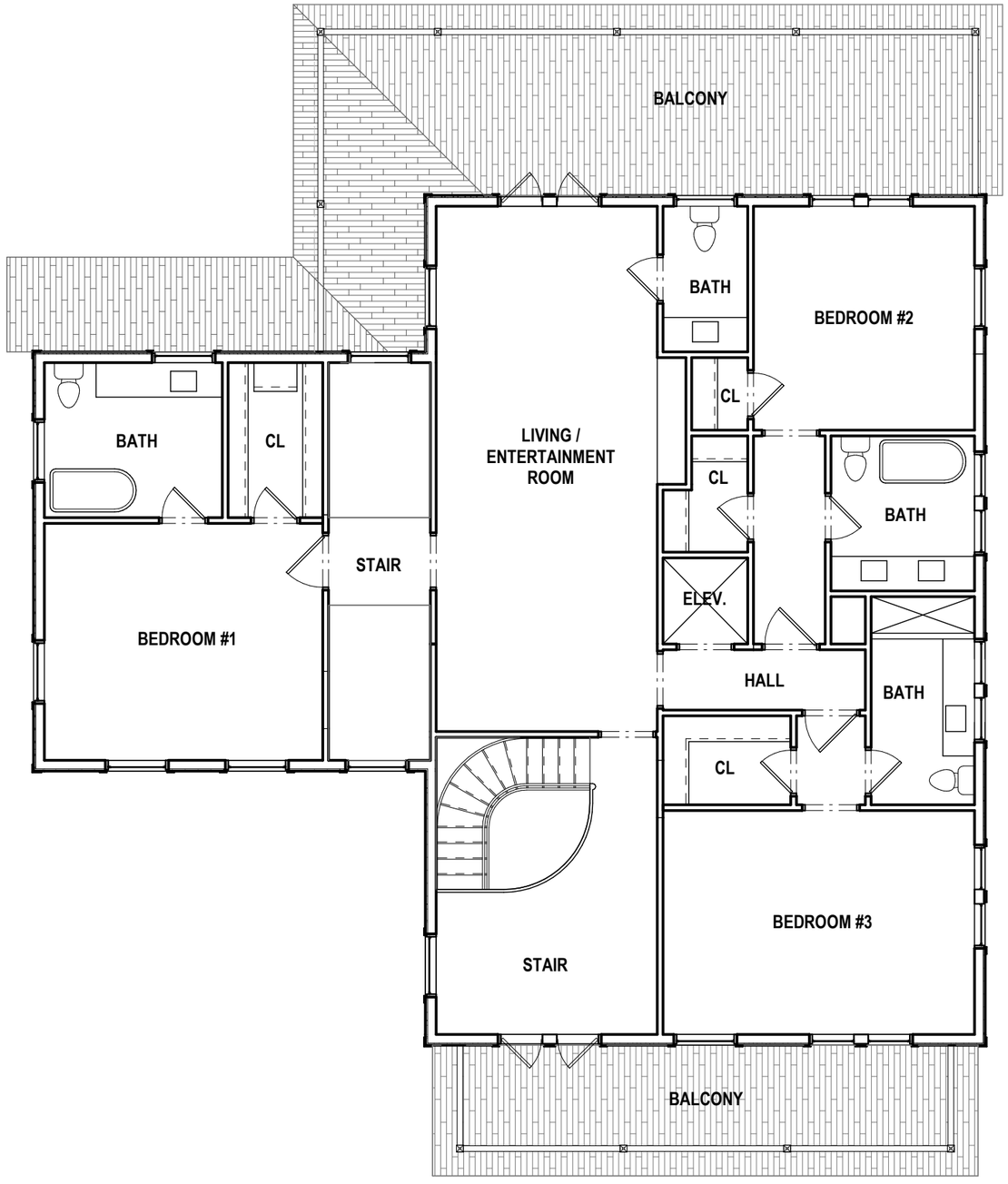

SECOND FLOOR PLAN
SCALE: 1/8" = 1'-0"

N

TYPE	DESCRIPTION	OPENING		COMMENTS
		WIDTH	HEIGHT	
WN-A	SINGLE DOUBLE HUNG WINDOW	3'-4"	6'-8"	
WN-B	GANGED DOUBLE HUNG WINDOW	5'-8"	6'-8"	
WN-C	SINGLE DOUBLE HUNG WINDOW - COTTAGE	5'-8"	8'-8"	
WN-D	GANGED DOUBLE HUNG WINDOW - COTTAGE	3'-4"	8'-8"	
WN-E	SINGLE FIXED WINDOW	2'-0"	4'-2"	
WN-F	LOUVERED ATTIC VENT	2'-0"	4'-2"	

LEGEND: DOOR AND WINDOW RENOVATION SCOPE

- EXISTING OPENING TO BE REMOVED
- EXISTING OPENING TO BE SALVAGED FOR REUSE IN NEW LOCATION
- REMOVE NON-HISTORIC OPENING AND REPLACE WITH NEW OPENING MATCHING HISTORIC CONFIGURATION
- EXISTING OPENING: FRAME TO BE REPAIRED AND RECEIVE NEW WINDOW SASHES TO MATCH EXISTING
- NEW OPENING TO MATCH EXISTING



SOUTH ELEVATION

SCALE: 3/16" = 1'-0"

TYPE	DESCRIPTION	OPENING		COMMENTS
		WIDTH	HEIGHT	
WN-A	SINGLE DOUBLE HUNG WINDOW	3'-4"	6'-8"	
WN-B	GANGED DOUBLE HUNG WINDOW	5'-8"	6'-8"	
WN-C	SINGLE DOUBLE HUNG WINDOW - COTTAGE	5'-8"	8'-8"	
WN-D	GANGED DOUBLE HUNG WINDOW - COTTAGE	3'-4"	8'-8"	
WN-E	SINGLE FIXED WINDOW	2'-0"	4'-2"	
WN-F	LOUVERED ATTIC VENT	2'-0"	4'-2"	

LEGEND: DOOR AND WINDOW RENOVATION SCOPE

- EXISTING OPENING TO BE REMOVED
- EXISTING OPENING TO BE SALVAGED FOR REUSE IN NEW LOCATION
- REMOVE NON-HISTORIC OPENING AND REPLACE WITH NEW OPENING MATCHING HISTORIC CONFIGURATION
- EXISTING OPENING: FRAME TO BE REPAIRED AND RECEIVE NEW WINDOW SASHES TO MATCH EXISTING
- NEW OPENING TO MATCH EXISTING



EAST ELEVATION
SCALE: 3/16" = 1'-0"

TYPE	DESCRIPTION	OPENING		COMMENTS
		WIDTH	HEIGHT	
WN-A	SINGLE DOUBLE HUNG WINDOW	3'-4"	6'-8"	
WN-B	GANGED DOUBLE HUNG WINDOW	5'-8"	6'-8"	
WN-C	SINGLE DOUBLE HUNG WINDOW - COTTAGE	5'-8"	8'-8"	
WN-D	GANGED DOUBLE HUNG WINDOW - COTTAGE	3'-4"	8'-8"	
WN-E	SINGLE FIXED WINDOW	2'-0"	4'-2"	
WN-F	LOUVERED ATTIC VENT	2'-0"	4'-2"	

LEGEND: DOOR AND WINDOW RENOVATION SCOPE

- EXISTING OPENING TO BE REMOVED
- EXISTING OPENING TO BE SALVAGED FOR REUSE IN NEW LOCATION
- REMOVE NON-HISTORIC OPENING AND REPLACE WITH NEW OPENING MATCHING HISTORIC CONFIGURATION
- EXISTING OPENING: FRAME TO BE REPAIRED AND RECEIVE NEW WINDOW SASHES TO MATCH EXISTING
- NEW OPENING TO MATCH EXISTING



NORTH ELEVATION
SCALE: 3/16" = 1'-0"

TYPE	DESCRIPTION	OPENING		COMMENTS
		WIDTH	HEIGHT	
WN-A	SINGLE DOUBLE HUNG WINDOW	3'-4"	6'-8"	
WN-B	GANGED DOUBLE HUNG WINDOW	5'-8"	6'-8"	
WN-C	SINGLE DOUBLE HUNG WINDOW - COTTAGE	5'-8"	8'-8"	
WN-D	GANGED DOUBLE HUNG WINDOW - COTTAGE	3'-4"	8'-8"	
WN-E	SINGLE FIXED WINDOW	2'-0"	4'-2"	
WN-F	LOUVERED ATTIC VENT	2'-0"	4'-2"	

LEGEND: DOOR AND WINDOW RENOVATION SCOPE

- EXISTING OPENING TO BE REMOVED
- EXISTING OPENING: FRAME TO BE REPAIRED AND RECEIVE NEW WINDOW SASHES TO MATCH EXISTING
- EXISTING OPENING TO BE SALVAGED FOR REUSE IN NEW LOCATION
- NEW OPENING TO MATCH EXISTING
- REMOVE NON-HISTORIC OPENING AND REPLACE WITH NEW OPENING MATCHING HISTORIC CONFIGURATION



WEST ELEVATION
SCALE: 3/16" = 1'-0"



PERSPECTIVE FROM STREET - EXISTING



PERSPECTIVE FROM STREET - PROPOSED



PERSPECTIVE FROM BACKYARD - EXISTING



PERSPECTIVE FROM BACKYARD - PROPOSED

FINAL SITE PLAN AND CARPORT FOR REVIEW

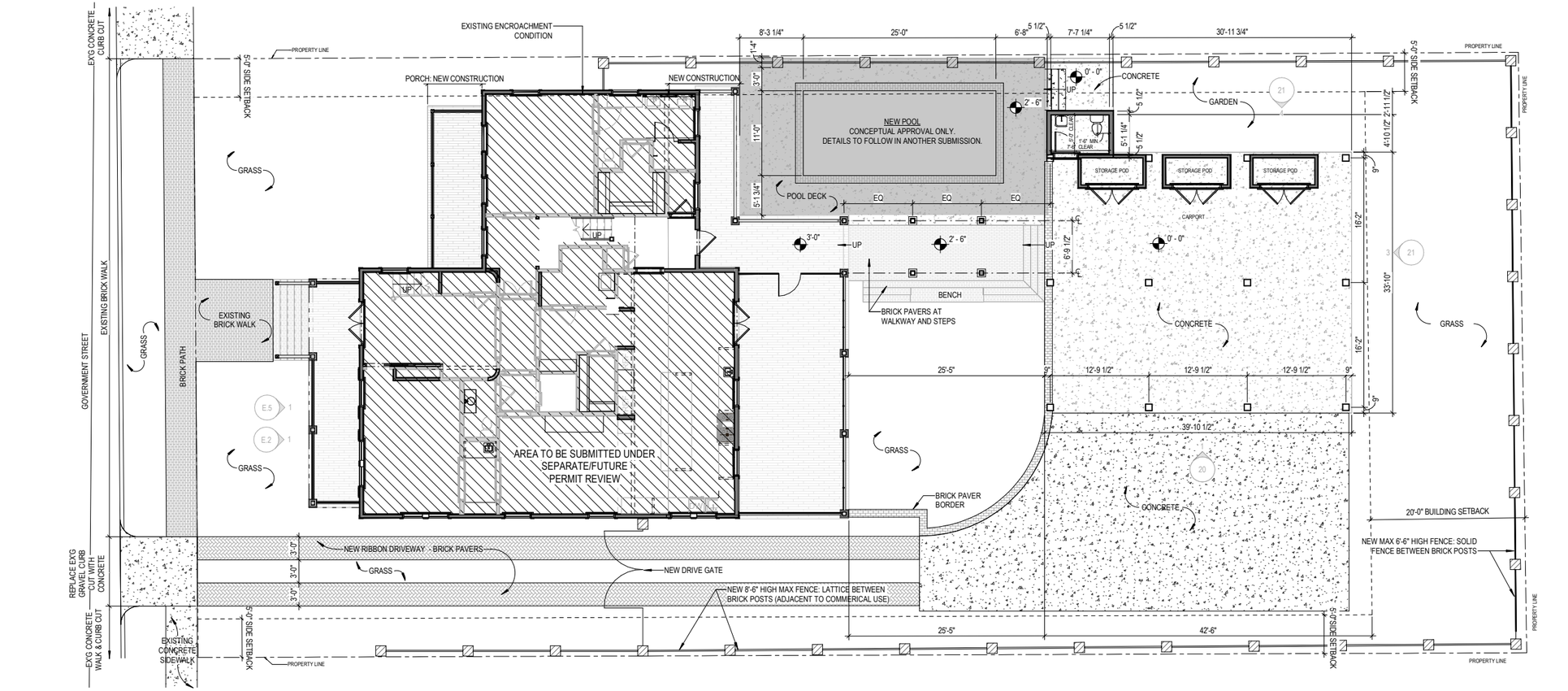

1 SITE PLAN ARB
19 SCALE: 1/8" = 1'-0"

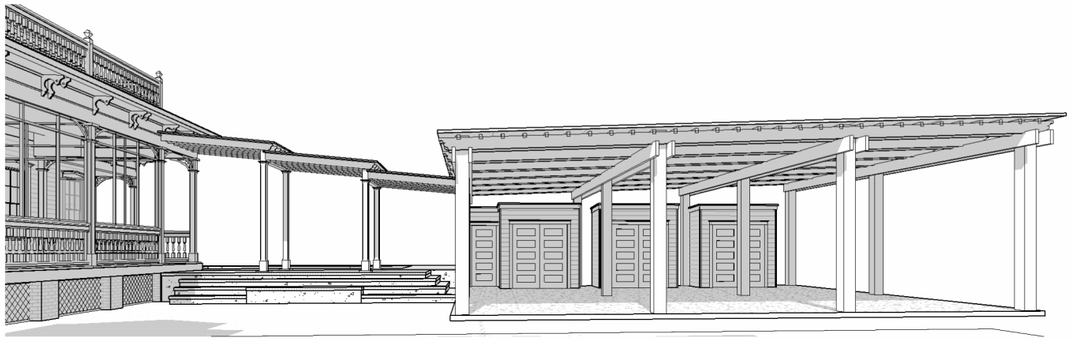

2 PERSPECTIVE - CARPORT & WALKWAY
20 NTS

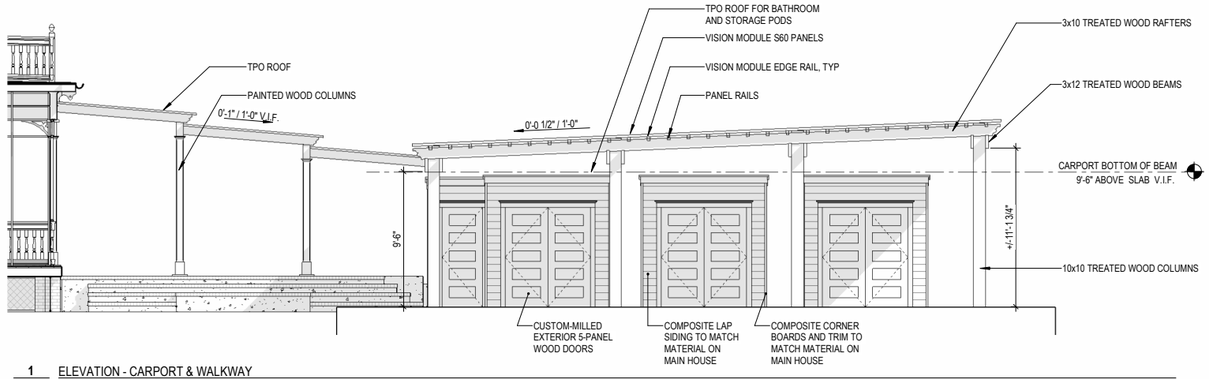

1 ELEVATION - CARPORT & WALKWAY
20 SCALE: 3/16" = 1'-0"

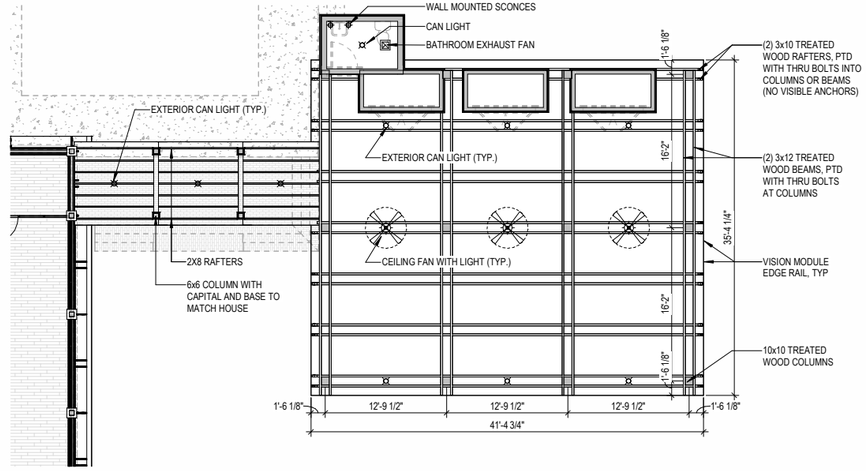

3 ROOF FRAMING PLAN / REFLECTED CEILING PLAN - CARPORT & WALKWAY
20 SCALE: 1/8" = 1'-0"

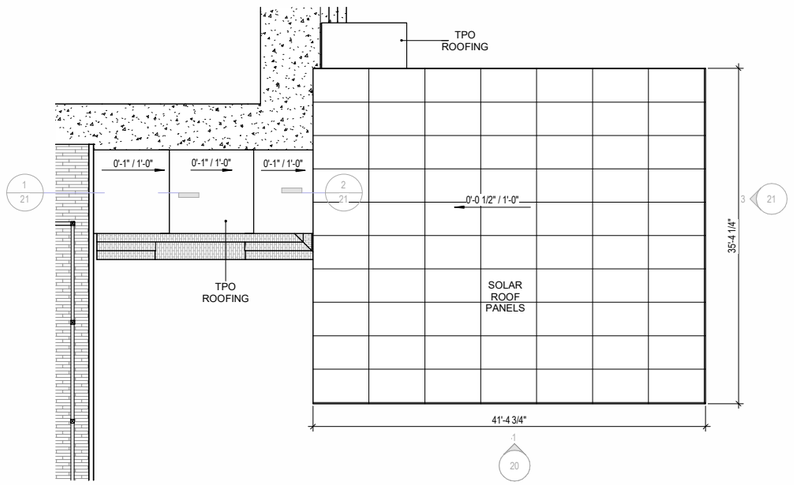

4 ROOF PLAN - CARPORT & WALKWAY
20 SCALE: 1/8" = 1'-0"

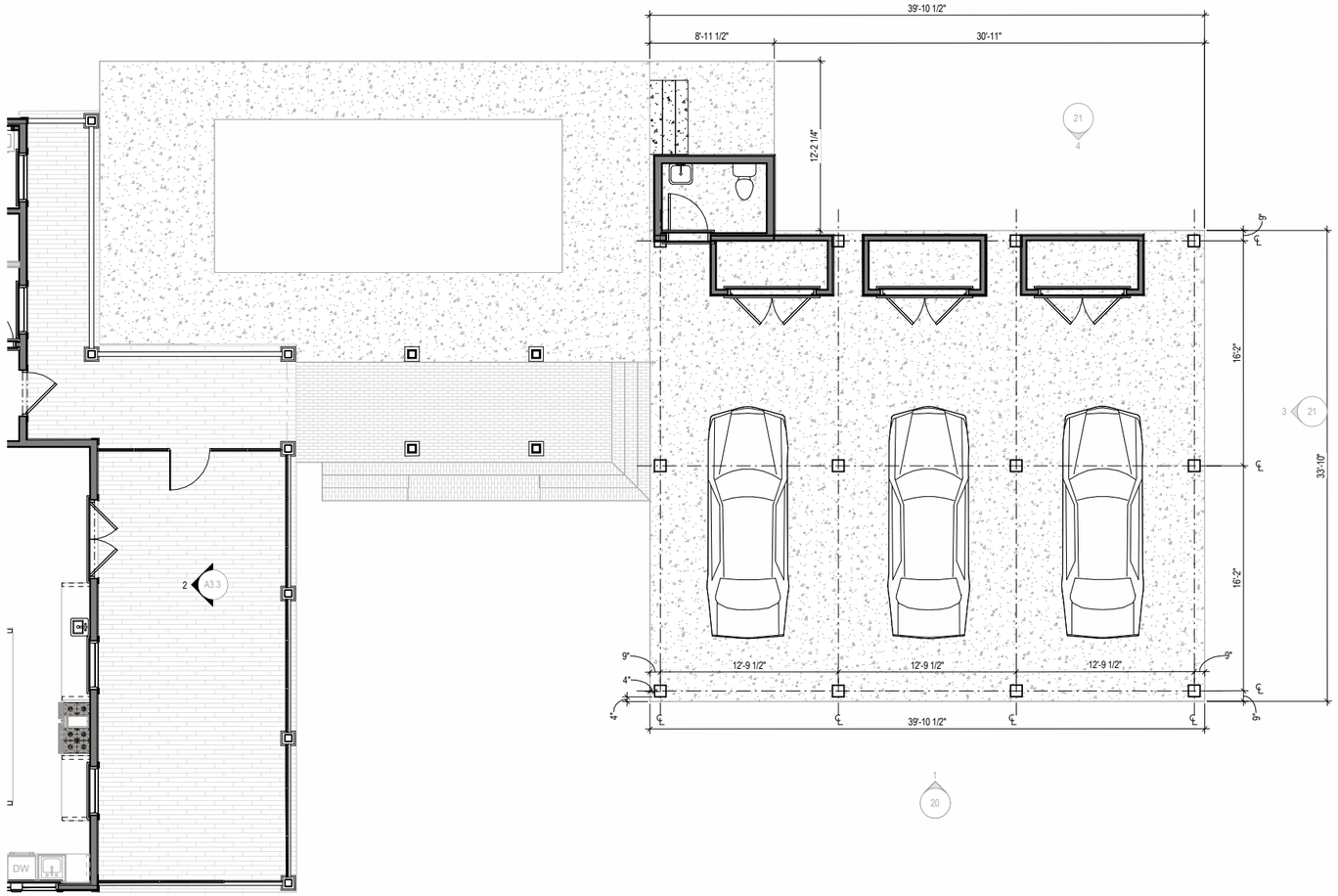

5 PLAN - CARPORT & WALKWAY
20 SCALE: 3/16" = 1'-0"



3 CARPORT SIDE ELEVATION
21 SCALE: 3/16" = 1'-0"

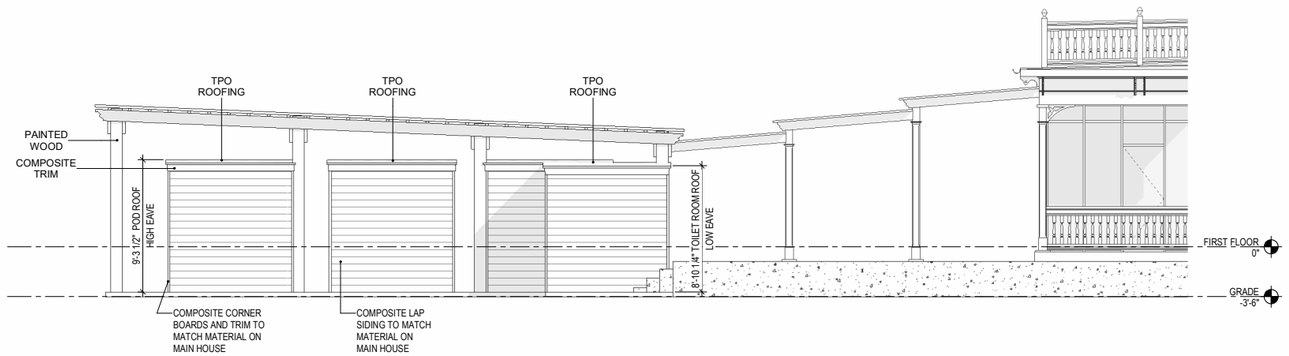

4 CARPORT REAR ELEVATION
21 SCALE: 3/16" = 1'-0"

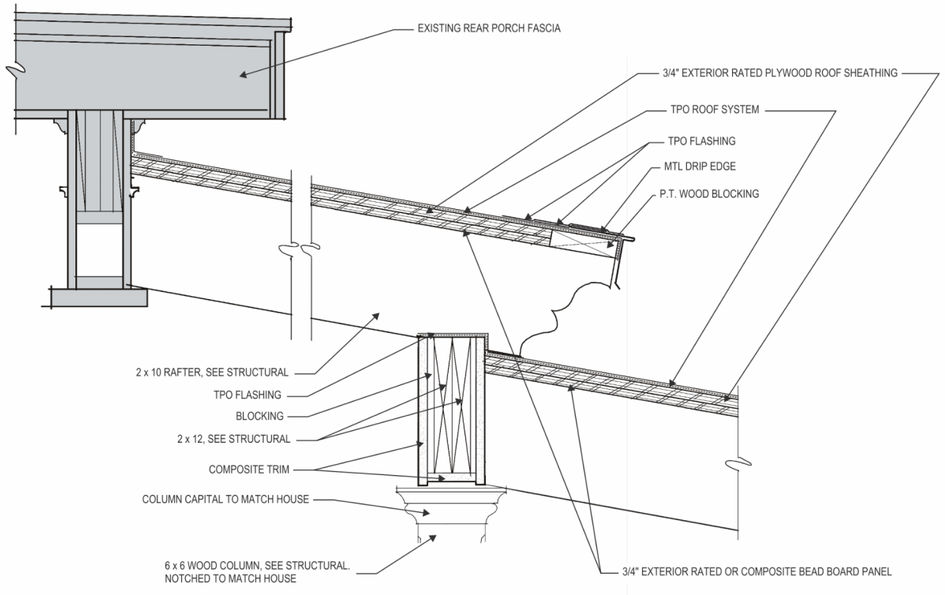

1 DETAIL - WALKWAY AT HOUSE

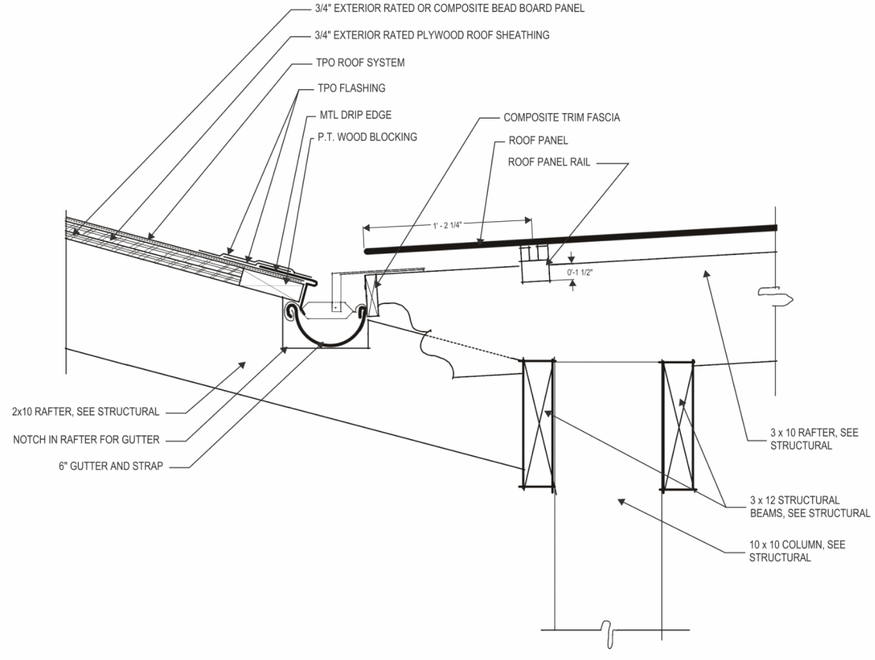

2 DETAIL - WALKWAY AT CARPORT

Project		**Catalog #**		**Type**	
Prepared by		**Notes**		**Date**	



Surface Mount | Wall Mount | Yoke Mount

Portfolio

LERS4C/LESQS4C Cylinders

4" Shallow Round and Square Cylinder
Surface, Ceiling, Wall, Up/Down, Yoke, Stem and Air Craft Cable Mount

Typical Applications
Office • Education • Healthcare • Hospitality • Retail • Residential

Interactive Menu

- Order Information page 2
- Product Specifications page 4
- Energy Data page 5
- Photometric Data page 6
- Connected Systems page 9
- Product Warranty

Product Certification

ENERGY STAR | Efficiency Standards T24 | RoHS COMPLIANT | UL CERTIFIED

Control Compatibility

WaveLinx LITE | WaveLinx PRO

Product Features

D2W | VividTune | powered by fifthlight | TAA | damp location | wet location

Top Product Features

- 250 to 3,000 lumens; Offered in 90, 97 and 98 CRI
- Extruded aluminum housing; Matte Black, White, Bronze and Silver paint finishes
- 6 color temperatures: 2400K, 2700K, 3000K, 3500K, 4000K and 5000K CCT
- Options to meet Trade Agreements Act requirements

Dimensional and Mounting Details

additional product diagrams

4IN ROUND CYLINDER SHALLOW SURFACE MOUNT

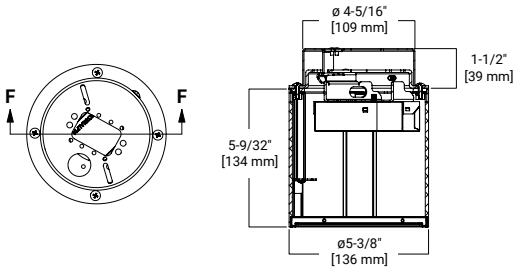

4IN SQUARE CYLINDER SHALLOW SURFACE MOUNT

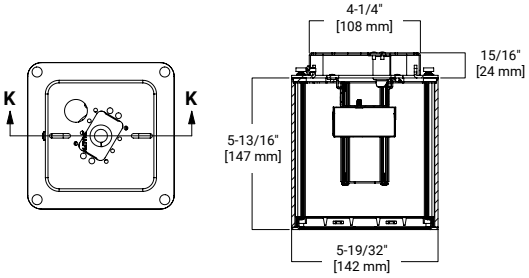

Order Information

SAMPLE ORDER NUMBER: **LERS4C10D010TRP**

Domestic Preferences [30]	Cylinder	Lumens	Driver	Remote [8]	Finish [10]
[Blank]=Standard **TAA**= Trade Agreements Act	**Ceiling surface mount** **LERS4C**=4-inch shallow round surface ceiling mount **LESQS4C**= 4-inch shallow square surface ceiling mount square aperture [1] **LESQRS4C**= 4-inch shallow square surface ceiling mount round aperture [2] **Ceiling surface mount Square with conduit canpoy (for round use Conduit Canopy Kit accessory)** **LESQSMS4C**=4-inch shallow square surface ceiling mount square aperture with surface mount conduit canopy [1] **LESQRSMS4C**=4-inch shallow square surface ceiling mount, round aperture with surface mount conduit canopy [2] **Wall mount Downlight** **LERWMS4C**= 4-inch shallow round wall mount **LESQWMS4C**= 4-inch shallow square wall mount square aperture [1] **LESQRWMS4C**= 4-inch shallow square wall mount round aperture [2] **Wall mount Up/down** **LERUDS4C**= 4-inch shallow round wall mount up/down [4] **LESQUDS4C**= 4-inch shallow square wall mount up/down square aperture [3] **LESQRUDS4C**= 4-inch shallow square wall mount up/down round aperture [4] **Yoke mount** **LERYMS4C**=4-inch shallow round yoke mount [24] **LESQYMS4C**=4-inch shallow square yoke mount square aperture [1] [24] **LESQRYMS4C**=4-inch shallow square yoke mount round aperture [2] [24]	**02**=250 lumens **05**=500 lumens **08**=800 lumens **10**=1000 lumens **15**=1500 lumens **20**=2000 lumens **25**=2500 lumens **30**=3000 lumens	**D010**=0-10V Dimming, 1% to 100%, 120V-277V (2500-3000 Lumens requires a Remote Driver) **3D010**=0-10V Dimming, 1% to 100%, 347V, 800-2000 Lumens (250, 500, 2500-3000 Lumens requires a Remote Driver) **D010TR**=0-10V (120-277V) or line voltage (120V) dimming, 5-100%, 250-2000 Lumens (2500 & 3000 Lumens requires a Remote Driver) **DE010**=0-10V Linear Dimming, 0% to 100%, 120V-277V, 500-2000 lumens (2500 & 3000 Lumens requires a Remote Driver) **D5LT**=Fifth Light® DALI DT6 Logarithmic Dimming, 0% to 100%, 120V-277V, 500-2000 lumens (2500 & 3000 Lumens requires a Remote Driver) **DMX**=DMX/RDM Logarithmic Dimming, 0% to 100%, 120V-277V, 800-2000 lumens (2500 & 3000 Lumens requires a Remote Driver)[6] **DMXC5**=DMX/RDM Logarithmic Dimming, 0% to 100%, 120V-277V, with RJ45 connection, 800-2000 lumens (2500 & 3000 Lumens requires a Remote Driver)[6] **DLE**=Lutron Ecosystem dimming 1% to 100%, 120-277V; 800-2000 lumens (2500 & 3000 Lumens requires a Remote Driver) **DLV**=Low Voltage System, 800-3000 lumens (2500 & 3000 Lumens requires a Remote Driver)	**blank**=Integral driver **R**=Remote driver [9]	**P**=White **MB**=Matte Black **SL**=Silver **BZ**=Bronze

Power Module **Choose between EC4C downlight or ECA4C adjustable**

SAMPLE ORDER NUMBER: **EC4C10209035**

Domestic Preferences [30]	Power Module	Lumen Levels [35]	Color	
[Blank]=Standard **TAA**= Trade Agreements Act	**EC4C**=4-inch cylinder light engine	**0208**=250, 500, 800 Lumens **1020**=1000, 1500, or 2000 Lumens **2535**=2500, 3000 Lumens	**90 CRI** **9024**= 90CRI, 2400K **9027**= 90CRI, 2700K **9030**= 90CRI, 3000K **9035**= 90CRI, 3500K **9040**= 90CRI, 4000K **9050**= 90CRI, 5000K	**97 CRI** **9727**= 97CRI, 2700K **9730**= 97CRI, 3000K

SAMPLE ORDER NUMBER: **ECA4C1020FL9030MW**

Domestic Preferences [30]	Power Module [35]	Distribution	Color		Finish
[Blank]=Standard **TAA**= Trade Agreements Act	**ECA4C0208** =4-inch cylinder adjustable light engine; 250, 500, 800 Lumens **ECA4C1020** =4-inch cylinder adjustable light engine; 1000, 1500, or 2000 Lumens	**NFL**=Narrow Flood **FL**=Flood	**90 CRI** **9024**= 90CRI, 2400K **9027**= 90CRI, 2700K **9030**= 90CRI, 3000K **9035**= 90CRI, 3500K **9040**= 90CRI, 4000K **9050**= 90CRI, 5000K	**97 CRI** **9727**= 97CRI, 2700K **9730**= 97CRI, 3000K	**MW**=Matte White **MB**=Matte Black **MMS**=Matte Metallic Silver

Trim is included with ECA4C adjustable power module. Do not order a separate trim.

SAMPLE ORDER NUMBER: **4LBSS3H**

Domestic Preferences[30]	Trim	Reflector	Finish	
[Blank]=Standard **BAA**=Buy American Act (SS3 spun trim only)	**4LB**=4" Reflector	**SS3**=Round shallow spun aluminum **SCS3**=Round shallow die cast **SCSSQ3**=Square shallow die cast	**LI**=Specular Clear [15] **H**=Semi-Specular Clear [15] **WMH**=Warm Haze [15] **WH**=Wheat [15] **GPH**=Graphite Haze [15]	**B**=Specular Black [15] **MW**=Matte White **MB**=Matte Black [16] **MMS**=Matte Metallic Silver [16]

continued on next page

Order Information

REQUIRED if Remote Driver (R) is specified on Cylinder

Remote Drivers[8]	Lumens	Voltage	Driver	Options [31] [33]	Controls
RC100=Remote 100 ft **RC75**= Remote 75ft **RC50**= Remote 50 ft **RC25**= Remote 25ft **RC15**= Remote 15ft **RC5**= Remote 5ft **RC2**= Remote 2 ft	**02**=250 lumens **05**=500 lumens **08**=800 lumens **10**=1000 lumens **15**=1500 lumens **20**=2000 lumens **25**=2500 lumens **30**=3000 lumens	**blank**=120-277V **3**=347V [34]	**D010**=0-10V Dimming, 1% to 100%, 120V-277V **D010TR**=0-10V (120-277V) or line voltage (120V) dimming, 5-100% **DE010**=0-10V Linear Dimming, 0% to 100%, 120V-277V, 500-3000 lumens **D5LT**=Fifth Light® DALI DT6 Logarithmic Dimming, 0% to 100%, 120V-277V, 500-3000 lumens **DMX**=DMX/RDM Logarithmic Dimming, 0% to 100%, 120V-277V, 800-3000 lumens [7] **DMXC5**=DMX/RDM Logarithmic Dimming, 0% to 100%, 120V-277V, with RJ45 connection, 800-3000 lumens [7] **DLE**=Lutron Ecosystem dimming 1% to 100%, 120-277V; 1 driver: 800 to 3000 Lumens / 2 drivers (Downlight and Remote only): 3000 Lumens [11] **DLV**=Low Voltage System, 800-3000 lumens	**EMBOD**=Bodine® Emergency Module with Remote Test Switch **EMBOD6ST**=Bodine® 6W Self Test Emergency Module with Remote Test Switch **EM7**=7W Emergency Module with Remote Test Switch **EM14**=14W Emergency Module with Remote Test Switch **EMBOD7ST**=Bodine® Self Test Emergency Module **EMV7**=7W Low Voltage Emergency Module with Remote Test Switch [21] **EMV14**=14W Low Voltage Emergency Module with Remote Test Switch [21] **ETRD**=Emergency transfer device [32]	**WPST**=Factory installed Wavelinx (includes control module, sensor, cable, tile mount and ceiling mount sensor) [13] [26] **WLST**=Factory installed WaveLinx Lite Sensor Kit [13] [27] **WPN** = WaveLinx PRO Wireless Node without sensor [13]

Domestic Preferences [30]	Accessories[29]	Type	Lengths
[Blank]=Standard **TAA**= Trade Agreements Act	**Pendant Kit**[17] **P436P**=White pendant stem kit for round suspended mount cylinder **P436BZ**=Bronze pendant stem kit for round suspended mount cylinder **P436MB**=Matte black pendant stem kit for round suspended mount cylinder **P436SL**=Silver pendant stem kit for round suspended mount cylinder	**Blank**=5 conductor for use with 0-10V driver **3C**=3 conductor for use with 120 or 277V **5C**= conductor for use with D5LT drivers **DMX**=No conductors for use with DMX and remote drivers **RM**=for Remote drivers	**Blank**=36" **SP*=*** Specify 6" to 144" in 1" increments
	Conduit Pendant Kit [25] **PMRCC4P**=Round pendant stem kit with conduit knockout cover, white **PMRCC4MB**=Round pendant stem kit with conduit knockout cover, black **PMRCC4BZ**=Round pendant stem kit with conduit knockout cover, bronze **PMRCC4SL**=Round pendant stem kit with conduit knockout cover, silver **PMSQCC44P**=Square pendant stem kit with conduit knockout cover, white **PMSQCC4MB**=Square pendant stem kit with conduit knockout cover, black **PMSQCC4BZ**=Square pendant stem kit with conduit knockout cover, bronze **PMSQCC4SL**=Square pendant stem kit with conduit knockout cover, silver		**Blank**=36" **SP*=*** Specify 6" to 144" in 1" increments
	Aircraft cable [25] **AC4120P=**120" white aircraft cable kit **AC448P**=48" white aircraft cable kit **AC4120MB=**120" black aircraft cable kit **AC448MB**=48" black aircraft cable kit	**Blank**=5 conductors **DMXC5**=DMX/RDM logarithmic Dimming with RJ45 connection	
	LNE4RUD=up/down gasketed lens, wet location, round **LNS4SQUD**=up/down gasketed lens, wet location square **Conduit Kit**[25] **SMRCC4P**=Round conduit canopy for round surface mount, white **SMRCC4MB**=Round conduit canopy for round surface mount, black **SMRCC4BZ**=Round conduit canopy for round surface mount, bronze **SMRCC4SL**=Round conduit canopy for round surface mount, silver **Connected Lighting Systems**[13] **WPST**=Field installed WaveLinx sensor Kit [26] **WLST**=Field installed WaveLinx Lite Sensor Kit[27]		

Notes

(1) Square reflector

(2) Round reflector

(3) Square reflector, requires two reflectors and light engines

(4) Round reflector, requires two reflectors and light engines

(6) DMX fixtures default to full on upon loss of DMX signal

(7) DMX fixtures default to full on upon loss of DMX signal

(8) Up down surface mount require 2 driver assemblies

(9) Order remote driver separately. See below to order.

(10) Consult factory for custom finishes.

(11) Only available up to 25 ft.

(12) Not available with up/down

(13) Refer to system specifications for additional information, features, and benefits. Order either factory installed option or accessory. WPN is factory installed only. Use with 0-10V driver.

(14) Refer to system specifications for additional information, features, and benefits. Use with 0-10V driver.

(15) Anodized or spun reflectors

(16) Die cast only

(17) 0-45° slope.

(19) Use with remote driver.

(21) ULus listed only

(22) Remote driver only. W2N not compatible with LuxWire.

(24) Ceiling mount only

(25) Not for use with remote driver

(26) WPST=WaveLinx wireless sensor kit for daylight dimming, PIR motion sensing, and optional RLTS - Real Time Location Services, use with 0-10V only.

(27) WSLT=WaveLinx Lite tile mount sensor kit for daylight dimming, PIR motion sensing, use with D010 only (Refer to WaveLinx Lite system specifications)

(30) To order product that is compliant with the Buy American Act of 1933 (BAA) or Trade Agreements Act (TAA), use the online specification configurator to specify BAA or TAA. Please refer to DOMESTIC PREFERENCES website for more information. Components shipped separately may be separately analyzed under domestic preference requirements. Accessories sold separately will be separately analyzed under domestic preference requirements. Consult factory for further information.

(31) 120V-277V

(32) Used to bypass local control during outage. Must be used in conjunction with UL 1008 device (provided by others).

(33) Non-IC

(34) D010 800 to 3000 lumens. 250, 500 and 3000 lumens use step down transformer) All other drivers use step down transformer.

(35) Nominal Lumens will vary depending on selected color, driver and reflector finish.

Product Specifications

Lower Reflector
- Painted die-cast aluminum or spun aluminum lower reflector with a lensed upper optical chamber provides superior lumen output with minimal source brightness
- Square surface mount available with square or round reflectors
- Spun reflectors are available in all Portfolio finishes
- Directional with baffle tilts from 0°-30°

Trim retention
- Two torsion springs hold flange tightly to the cylinder lip

Cylinder
- Round and soft square extruded aluminum
- Matte white, bronze, silver or matte black. Contact factory for custom finishes.
- Available in standard and shallow heights
- Yoke mount provides +/-45° lockable tilt

Mounting
- Mounting plate installs to mounted junction box
- Cylinder mounts to plate with easy twist and lock hooks for ceiling mount
- For wall mount, mounting arm attaches directly to junction box via a robust mounting plate
- Offered with optional stem and aircraft cable
- Conduit canopy allows for mounting pendant and surface cylinder on hard ceilings provided in painted finish to match the cylinder accommodates ½" or ¾" conduit.

Thermal
- Aluminum heat sink conducts heat away from the LED module for optical performance and longer life

LED System
- Contains a plurality of high brightness white LED's combined with a high reflectance upper reflector and convex transitional lens producing even distribution without pixilation
- Auto resetting, thermally protected, LED's are turned off when safe operating temperatures are exceeded
- Quick disconnect allows for tool-less replacement of LED engine from below ceiling
- 90 and 97 CRI
- 90 & 97CRI: L78 55,000 hours for 1000-2000 lumens, L90 55,000 for all other lumen output
- Color variation within 2-step MacAdam ellipses
- Available in 2400K, 2700K, 3000K, 3500K, 4000K and 5000K correlated color temperature (CCT)

Vividtune and High CRI
- 98 CRI and W2N: L70 55,000 hours
- D2W™ – dim-to-warm shifts CCT from 3000K to 1850K as fixture dims mimicking halogen sources.
- W2N - Tunable white CCT range 2700K to 6500K or 2000K to 5000K, 90 CRI. Standard
- **98 CRI** With a full-spectrum approach using broad-blue chip technology and special phosphor blends, Thrive is able to closely match the spectrum of the sun across all color temperatures. Benefits of the natural spectrum of the sun using Thrive include superior accurate color rendering, reduced eye strain, and a higher sense of emotional well-being.
- See dedicated specification sheet for more details.

Driver
- Standard 120-277V 0-10V dimming driver provides flicker-free dimming from 100% to 1%
- Optional 120V leading edge, <1% 0-10V, Fifth Light, DMX or Lutron®
- Remote driver option up to 100' based on driver selection
- Distributed low voltage power system combines power, lighting, and controls with ease of installation.

Emergency Option
- Provides 90 minutes of standby lighting, meeting most life safety codes for egress lighting
- Available Self-Test (self-diagnostic) with remote charge indicator and test switch
- Emergency Transfer Relay Device bypasses local control during a power outage
- UL 924 listed

Connected Lighting System Options
Two WaveLinx connected systems to choose from. Refer to WaveLinx system specifications and application guides for details.

WaveLinx Wireless System Tilemount Sensor Kit
- WaveLinx Wireless WPST tile mount sensor kit offers daylight dimming, PIR motion sensing, scene and zone configuration, automatic commissioning; and optional RLTS - Real Time Location Services available.

WaveLinx Lite System Tilemount Sensor Kit
- WaveLinx Lite WLST tile mount sensor kit offers daylight dimming and PIR motion sensing, scene and grouping configuration.

WaveLinx Tilemount Kits Application
- The WPST and WLST tilemount kits include a control module mounted on the luminaire junction box via 1/2" knock-out, and a tilemount sensor on 54-inch whip; for ceiling installation by direct-mount spring clips or via mounting bracket in octagon ceiling boxes.
- The WPST and WLST tilemount kits may be ordered as factory installed on the luminaire, or ordered separately as a field installed accessory kit.

Compliance
- Pendant mount cULus Listed for damp locations
- Ceiling mount cULus Listed for wet locations and IP66 compliant in covered ceiling
- Wall mount cULus Listed for wet locations and IP66 compliant, requires lens accessory for up/down wall mount
- EMI/RFI emissions per FCC 47CFR Part 18 Class B consumer limits
- RoHS compliant
- Photometric testing completed in accordance with IES LM-79
- LED life testing completed in accordance with IES LM-80 standards

Warranty
- Five year warranty www.cooperlighting.com/legal

Dimensional and Mounting Details

4IN ROUND CYLINDER
SHALLOW YOKE MOUNT

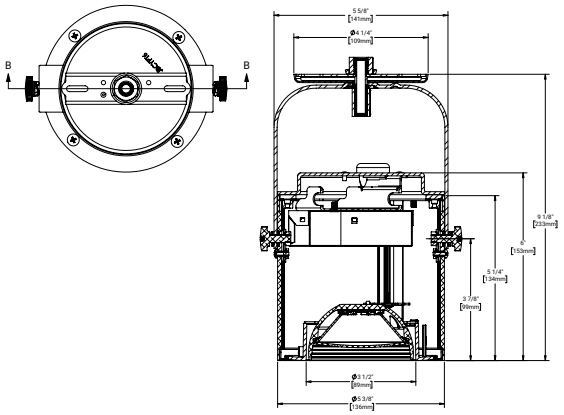

4IN SQUARE CYLINDER
SHALLOW YOKE MOUNT

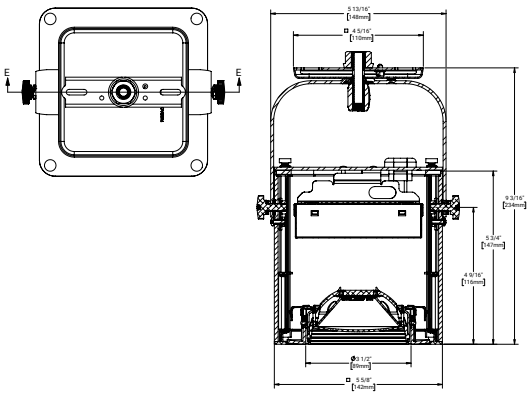

SOLAR PANEL / CARPORT ROOF MATERIAL

LUMOS



Vision System Installation Manual

V3

Table of Contents

1. General Information 3

1.1 Disclaimer of Liability 3
1.2 Warnings and Safety Guidelines 3
1.3 Important Statements 4
1.4 Cleaning Requirements 5
1.5 Module Specifications 6
1.5.1. Backframe Configurations 6
1.5.2. Electrical Specifications 7

2. Installation 8

2.1 System Components 8
2.2 Mechanical Installation 8
2.2.1. Specifications and Notes 8
2.2.2. Mechanical Installation Steps 8
2.2.3. Sealing the Array 9
2.4 Electrical Installation 11
2.4.1 Wireways 11
2.4.2 Grounding/Bonding 11

3. Returns 12

4. Contact 12

Copyright © 2022 Lumos Solar, Inc. | www.lumossolar.com | 303.449.2394

1.5 Module Specifications

1.5.1. Backframe Configurations

The Vision Module System is available in two sizes: the “L Series” and the “S Series”. The L Series modules are available with a variety of backframe types, which create cantilevered glass edges around the perimeter of the array. The S Series modules are offered with an interior backframe, meaning all edges of the modules are exposed.

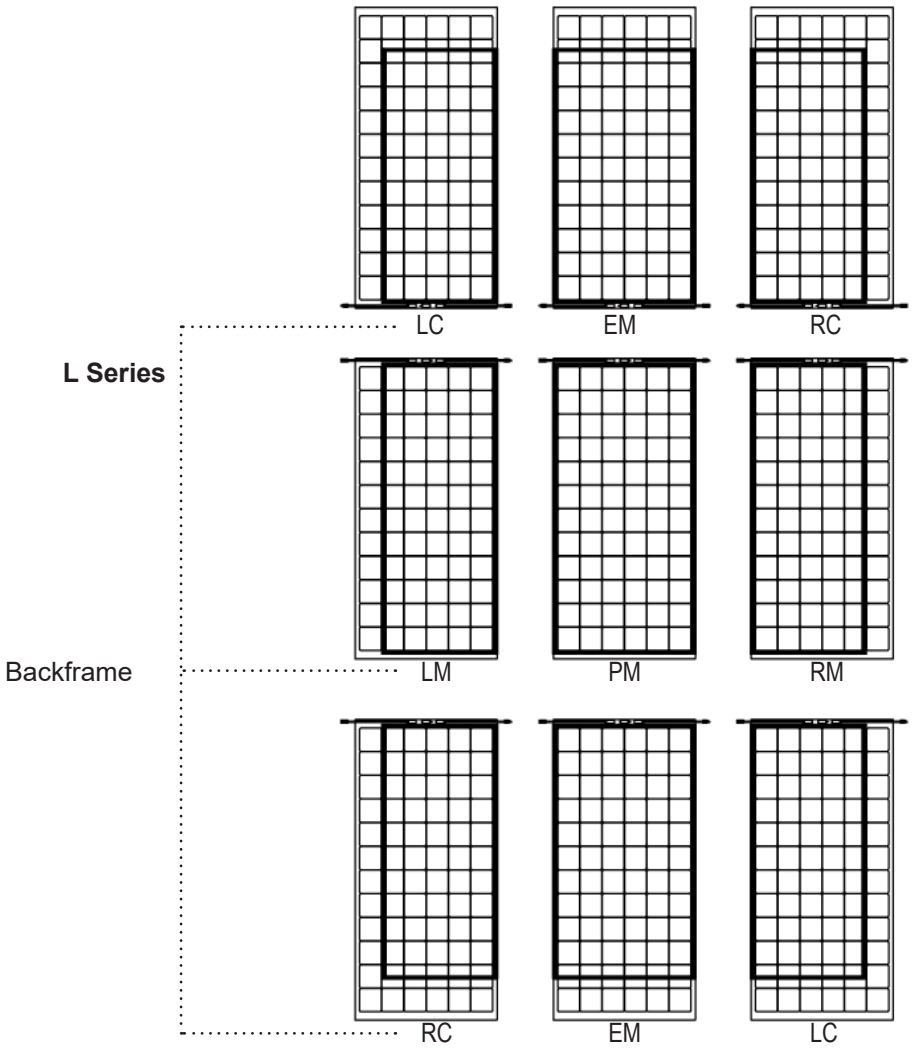

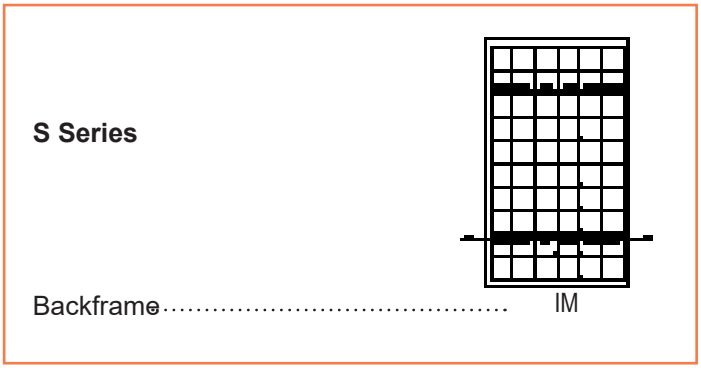

Copyright © 2022 Lumos Solar, Inc. | www.lumossolar.com | 303.449.2394

1.5.2. Electical Specifications

Both L Series and S Series modules are offered with a variety of cell layouts.

Vision Module System

BiFi

VISION SYSTEM SPECIFICATIONS

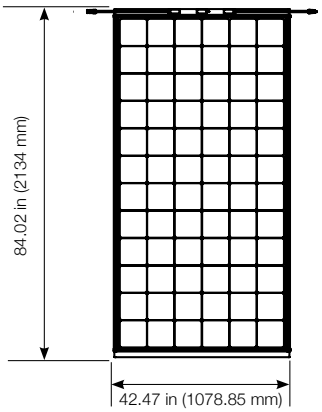

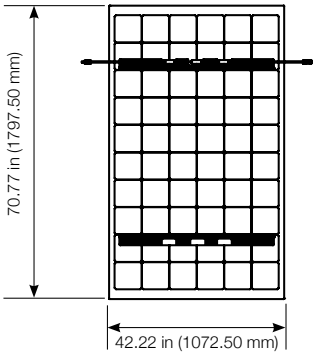

Series		L				S			
Matrix	Cells	72	60	40	00	60	48	32	00
	Power	430W	355W	240 W	0 W	355W	290 W	190 W	0 W
	Transmittance	8%	21%	43%	86%	13%	29%	50%	88%
Peak Power Voltage (Vmp)		39.90 V	32.94 V	22.24 V	0 V	32.94 V	26.8 V	17.70 V	0 V
Maximum Power Current (Imp)		10.78 A	10.78 A	10.80 A	0 A	10.78 A	10.88 A	10.90 A	0 A
Open Circuit Voltage (Voc)		49.20 V	41.00 V	27.4 V	0 V	41.00 V	32.9 V	21.90 V	0 V
Short Circuit Current (Isc)		11.30 A	11.40 A	11.40 A	0 A	11.40 A	11.50 A	11.40 A	0 A
Module Efficiency		19.4%	16.2%	10.9%	0%	19.2%	15.6%	10.4%	0%
Operating Temperature		-40 °C to 85 °C							
Maximum System Voltage		1500 V							
Maximum Series Fuse Rating		25 A							
Power Tolerance		+/-3%							
Solar Cell		Monocrystalline Bifacial 6.5" x 6.5" (166 mm x 166 mm)							
Cell Layout		6 x 12	6 x 10	4 x 10	0	6 x 10	6 x 8	4 x 8	0
Module Dimensions		84.02 in x 42.47 in x 2.06 in (2134 mm x 1078.85 mm x 52.17 mm)				70.77 in x 42.22 in x 2.06 in (1797.50 mm x 1072.50 mm x 52.17 mm)			
Module Area		24.6 ft² (2.3m²)				20.8 ft2 (1.9m²)			
Front/ Back Glass		Fully Tempered 3.2mm Low-Iron PV Glass							
Module Weight		105.5 lbs (47.8 kg)				78.6 lbs (35.6 kg)			
System Weight / Area		SD 4.85 psf (23.68 kg/m²) MD 5.06 psf (24.71 kg/m²)				SD 4.55 psf (22.22 kg/m²) MD 4.81 psf (23.48 kg/m²)			
Static Load		L Series +113 psf/ -50 psf				S Series +113 psf/ -50 psf			
Output Cables		12 AWG PV Wire and MC4 Compatible Connectors							
Fire Rating		Class A							
Certifications		UL 61730 PENDING							
Warranty		10 years Workmanship / 30 years Linear Power Production (Power Production Warranty on Front Side STC Only)							

TEMPERATURE COEFFICIENTS

Nominal Operating Cell Temperature (NOCT)	43.6 °C
Power Temperature Coefficient (Pmpp)	-0.38 % / °C
Voltage Temperature Coefficient (Voc)	-0.36 % / °C
Current Temperature Coefficient (Isc)	0.07 % / °C

Copyright © 2022 Lumos Solar, Inc. | www.lumossolar.com | 303.449.2394

2. Installation

2.1 System Components

Your system will be either L Series or S Series. Here are the basic components of each system:

L Series:

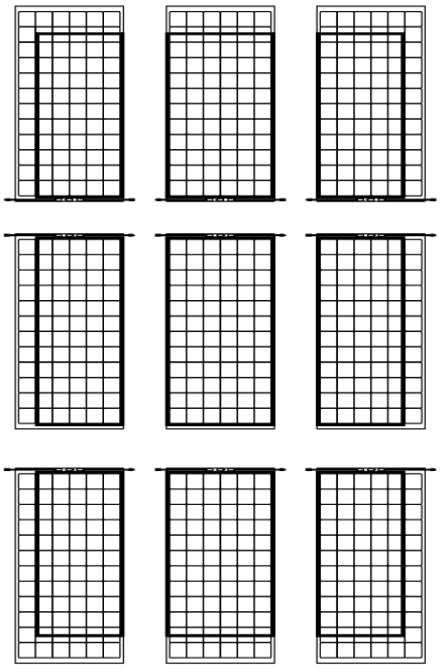

L Series Modules

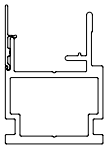

SD Edge Rail

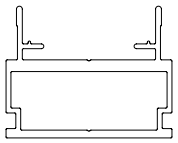

SD Shared Rail

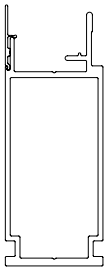

MD Edge Rail

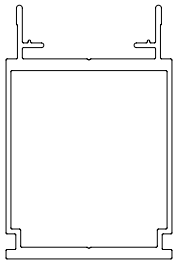

MD Shared Rail

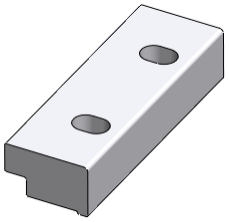

Rail Clamp

S Series:

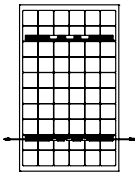

S Series Modules

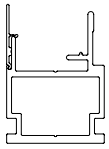

SD Edge Rail

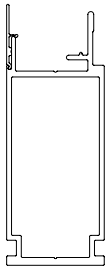

MD Edge Rail

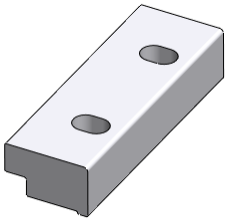

Rail Clamp

Copyright © 2022 Lumos Solar, Inc. | www.lumossolar.com | 303.449.2394

2.2 Mechanical Installation

2.2.1. Specifications and Notes

- Tighten all set screws until they are flush with the module backframe (or tighter) AND are torqued to 60 in-lbs or higher.
- When connecting rails to support structures, fasteners with corrosion resistance suitable for the local environment must be used. Lumos recommends 300 series stainless steel, hot-dip galvanized, or Geomet coated fasteners, but the final specification must be determined by the engineer of record for the project.
- All Lumos rails are aluminum. Lumos recommends the use of a galvanic isolator when mounting our rails to any material other than aluminum. A layer of electrical tape will suffice for this purpose.

2.2.2. Mechanical Installation Steps

1. Identify whether you are installing an L Series or an S Series system

2. Lay out your rails per the critical dimensions document and your system plans. Make sure you orient the edge rails correctly, with the removable side cover facing away from the center of the module (see image below).

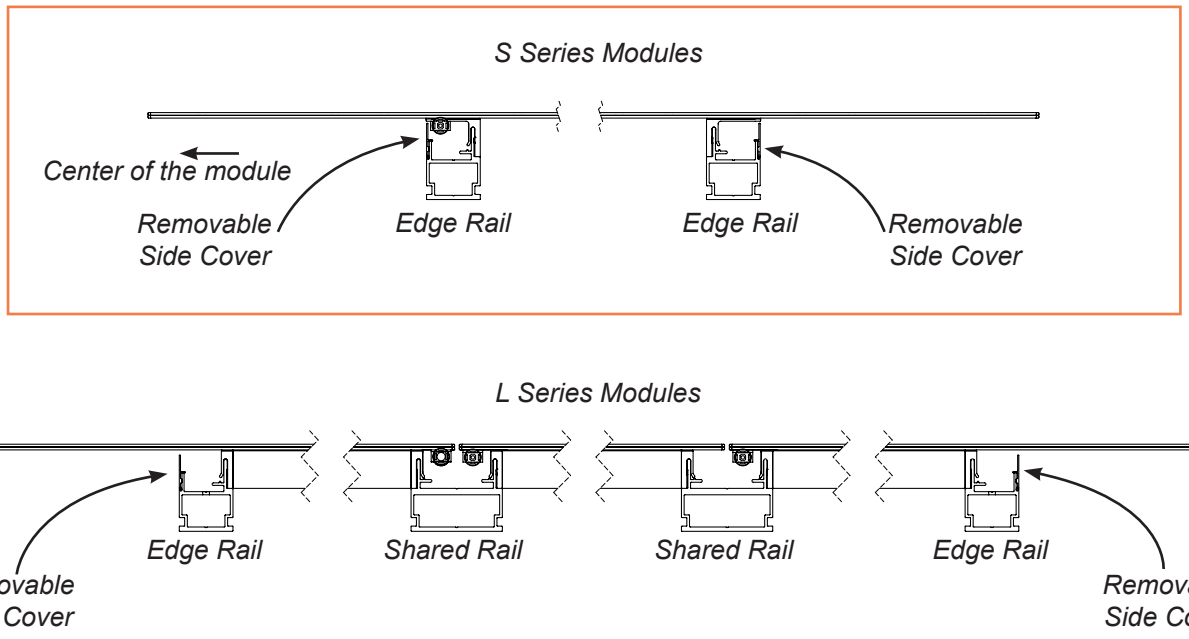

3. Cut the last rail in each rail line as necessary. Leave 1/8” of rail beyond the last module backframe. A 14” chop saw is required for cutting MD rails.

4. Fasten the rails to the support structure using rail clamps provided. ***The number of clamps and their required spacing will be specified in the stamped plans for your installation.*** Rail clamps are only one way to attach vision rails. Other methods are also acceptable.

   a. Place the first module on the rails.

   b. Make sure both rail fins slide into the corresponding frame slots (see image below). Slide the module toward the end of the rails until there is about 1/8” of rail sticking out of the backframe.

Copyright © 2022 Lumos Solar, Inc. | www.lumossolar.com | 303.449.2394

Page 21 of 25

c. L Series arrays might include a variety of backframe types (see the “Module Specifications” section for nomenclature). Make sure you are installing the correct module in the correct location of the array. This will depend on your specific project.

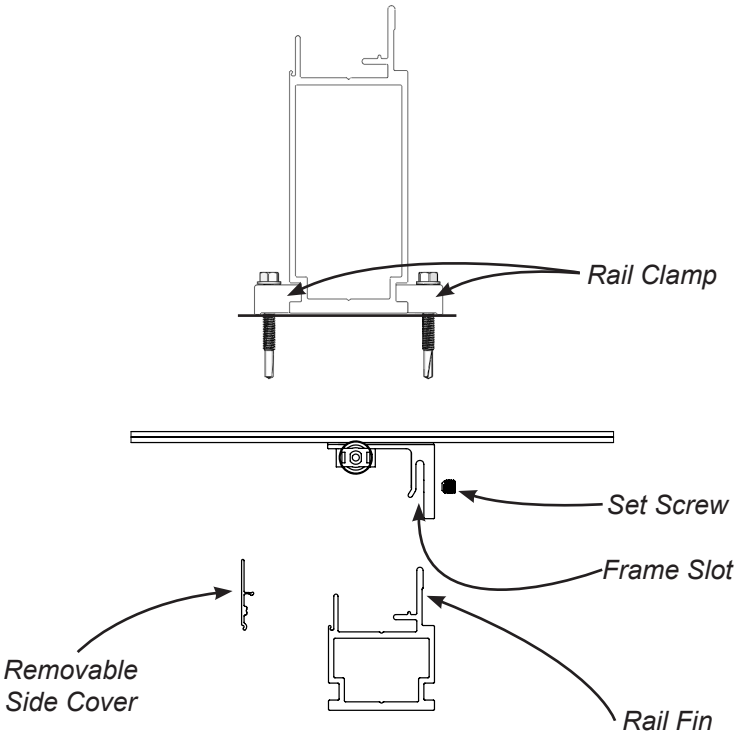

5. Tighten all 4 set screws on the first module.

Note: If a set screw on any module during installation lands within 1” of a butt joint between rails, use one of the two options mentioned below to add extra attachment. Address any sharp edges or screw tips that may be in contact with wiring in the rail accordingly.

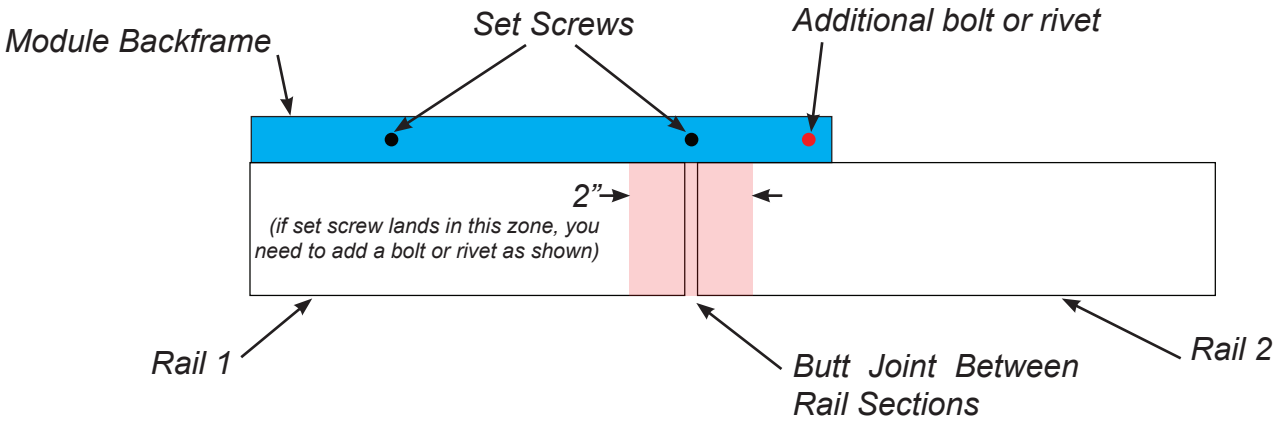

Details for the rivet option: Use an aluminum or stainless steel rivet with a minimum 3/16” diameter, and a grip length for 1/2” material. Use a black rivet or paint the head black with touchup paint after installing.

Details for the bolt option: Use a 316 stainless steel bolt, 1/4-20x1”, ideally a button head. Use a flat washer and nylock nut on the back side. The nut should be zinc plated to avoid galling. If a stainless nut is used for any reason, be sure to use anti-seize to avoid galling.

Copyright © 2022 Lumos Solar, Inc. | www.lumossolar.com | 303.449.2394

6. Place the next module on the rails.

   a. For S Series systems, install the spacer on the rail fin such that it touches the backframe of the first module. Slide the 2nd module toward the spacer until it stops. There will be a 1/4” gap between the glass of the modules.

   b. For L Series systems, slide the 2nd module toward the 1st until the frames are touching, creating a 1/4” gap between the glass.

   c. Wiring in shared rails must be completed as the modules are installed, as the wireways will be inaccessible afterward. Wiring in edge rails can be completed at any time.

7. Repeat steps 5 and 6 until all your modules are installed.

   a. For L Series Systems, make sure you install the correct backframe types in the correct locations. This is project specific and details will be in your project plans.

8. Remember: Wiring in shared rails must be completed as the modules are installed, as the wireways will be inaccessible afterward. Wiring in edge rails can be completed at any time.

9. See electrical installation section for details.

10. Install the end caps by pressing them into the rail ends. All rail types have unique end caps. End caps must be installed before modules are installed above them.

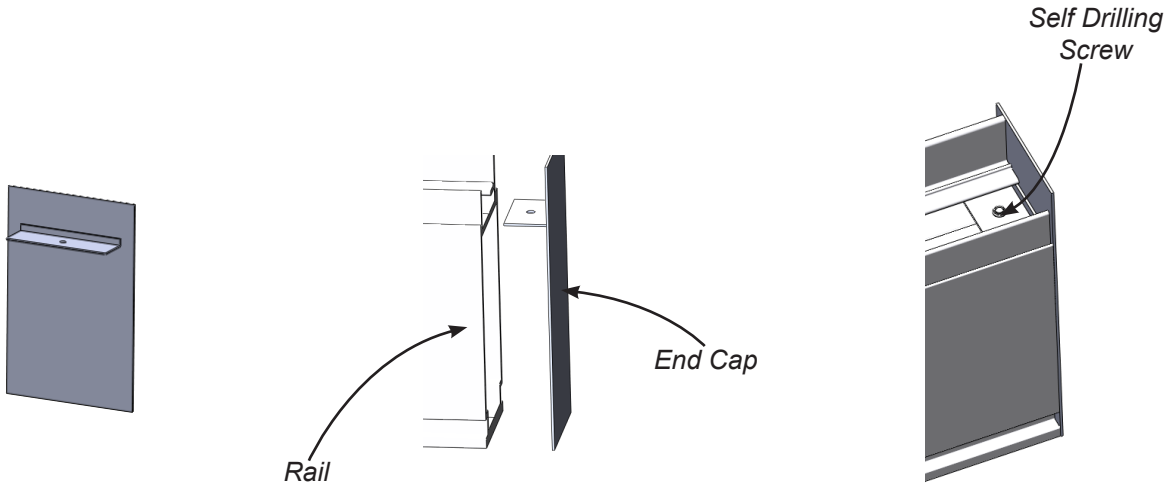

End Cap Installation
(MD Shared Rail)

Copyright © 2022 Lumos Solar, Inc. | www.lumossolar.com | 303.449.2394

VISION MODULE SYSTEM CRITICAL DIMENSIONS PACKAGE

REVISIONS			
REV.	DESCRIPTION	DATE	APPROVED
3	ADDED HEIGHT DIMS TO MOD & RAIL ASSEM, UPDATED PMAX VALUES BASED ON LATEST TEST RESULTS	12/9/2021	KY
4	UPDATED GLASS CANTILEVERS, RAIL SPACING, AND LIGHT TRANSMITTANCE VALUES	3/28/2022	BR
5	ADDED SHEET FOR SINGLE L SERIES PM MODULE ON TWO EDGE RAILS	7/20/2022	JT
6	ADDED MODULE GAP SHEET	11/9/2022	BR

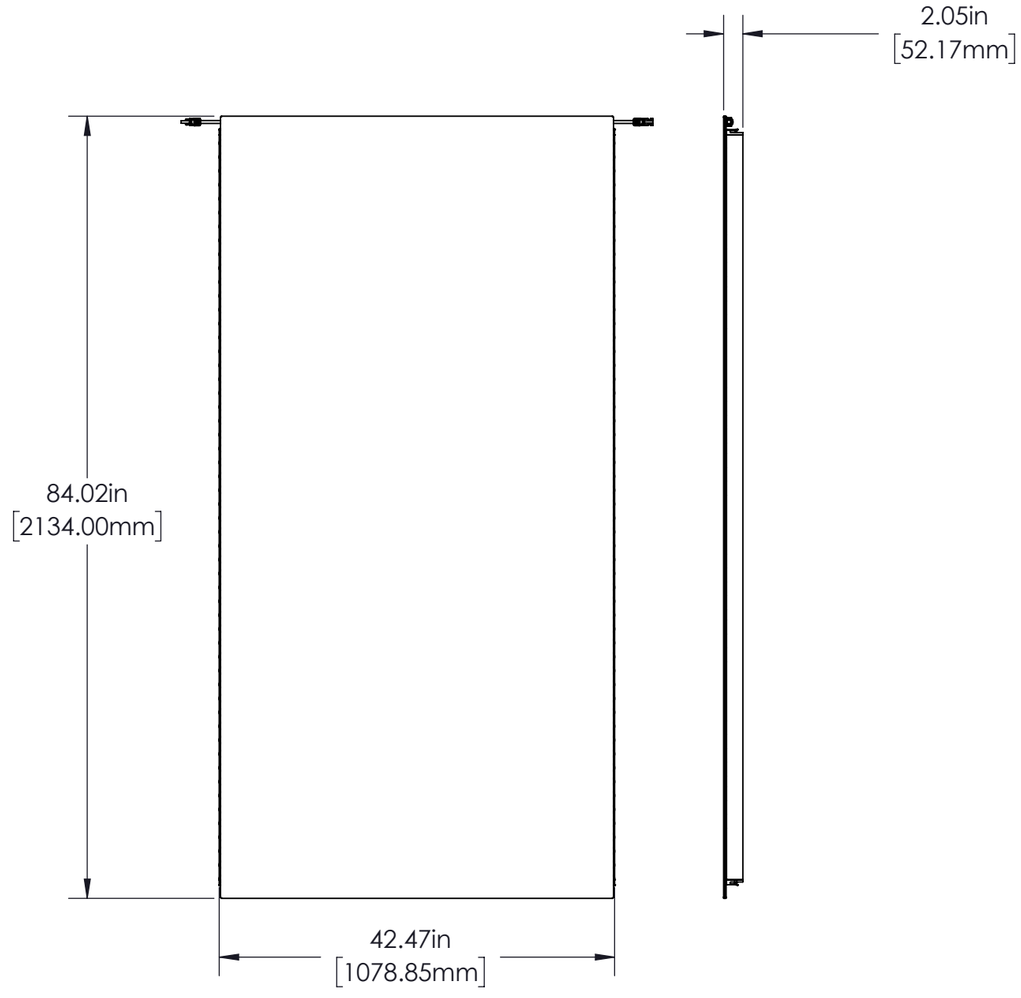

L SERIES

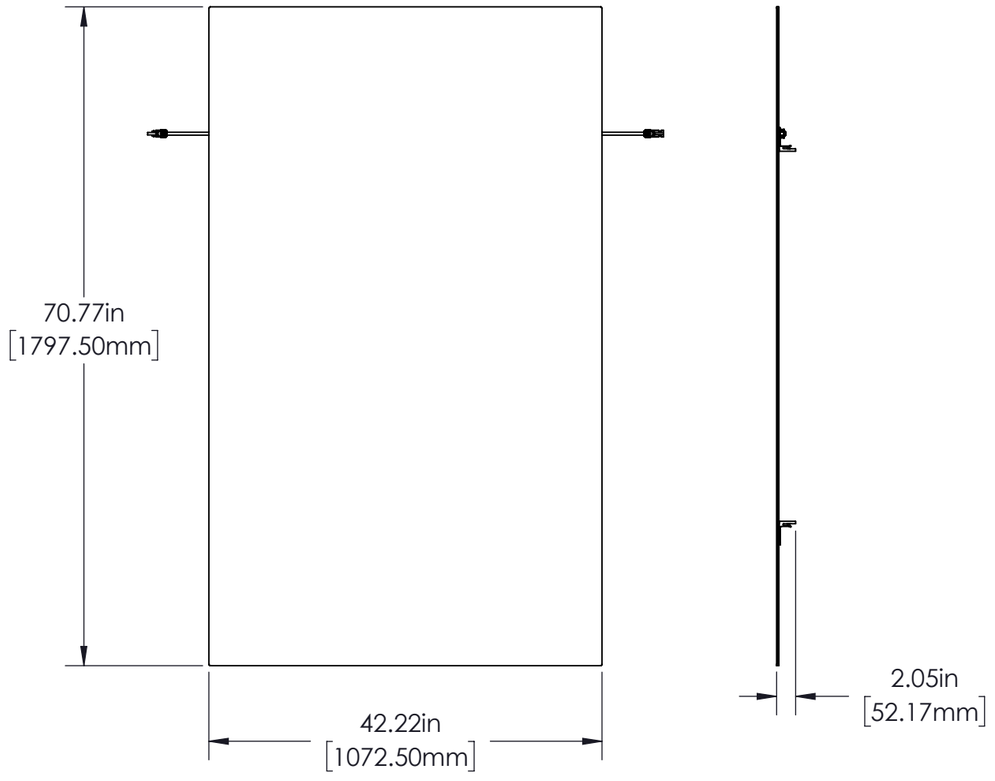

S SERIES

LUMOS
555 Aspen Ridge Dr, Unit B
Lafayette, CO 80026
(303) 449-2394
www.lumossolar.com

DRAWING TITLE
VISION CONCEPT LAYOUTS

FILE NAME: Vision System Critical Dimensions Drawing

DISCLAIMER
THIS DRAWING IS THE PROPERTY OF LUMOS, LLC (LUMOS). THIS INFORMATION IS CONFIDENTIAL AND IS TO BE USED ONLY IN CONNECTION WITH WORK DESCRIBED BY LUMOS. NO PART IS TO BE DISCLOSED TO OTHERS WITHOUT WRITTEN PERMISSION FROM LUMOS.

DRAWN BY
KY, DG, BR

REVIEWED BY
NOT REVIEWED

REV 5

DATE
11/9/2022

ORIGINAL SIZE
11"X17"

SCALE
AS NOTED

SHEET/DRAWING NUMBER
1

AVAILABLE FRAME TYPES, L SERIES

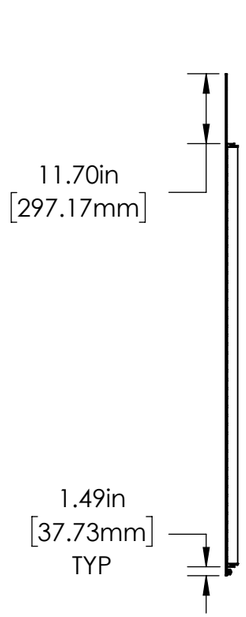

PROFILE VIEW

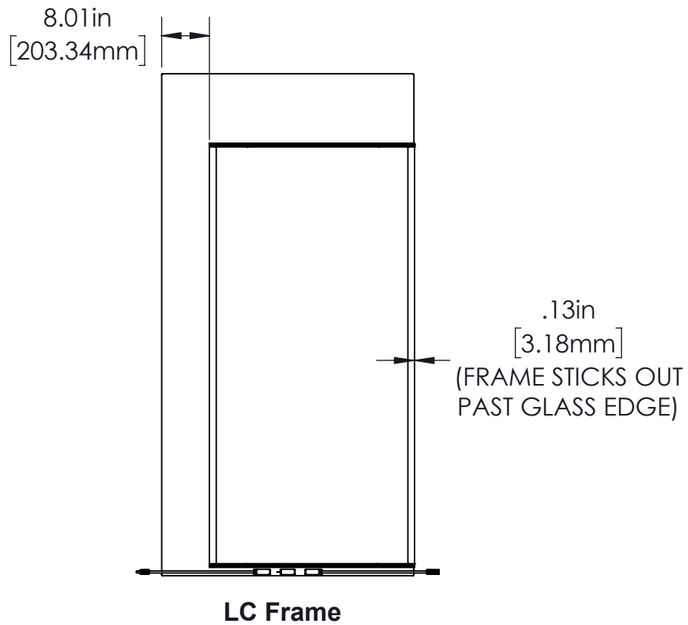

LC Frame

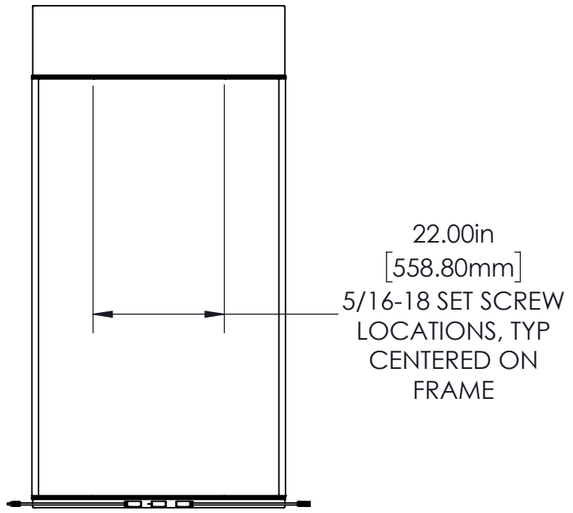

EM Frame

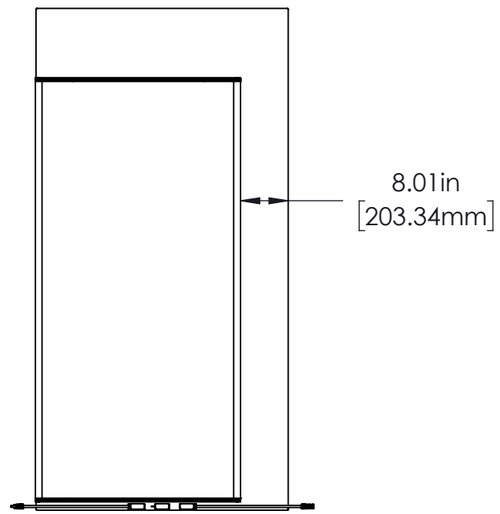

RC Frame

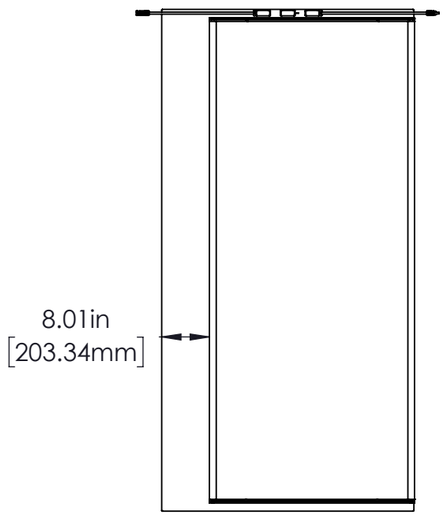

RM Frame

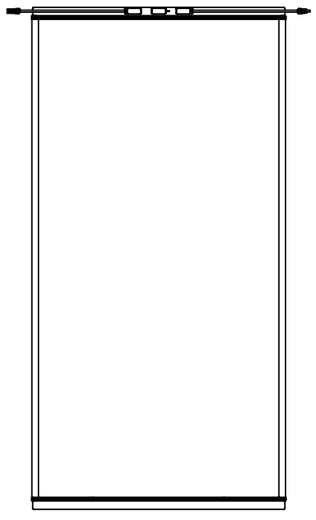

PM Frame

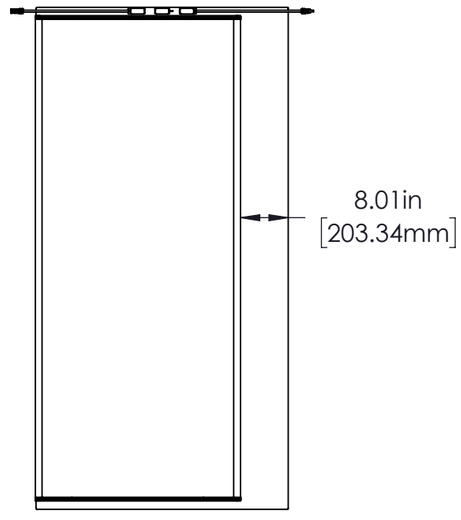

LM Frame

NOTE:
THE VIEWS SHOWN IN THIS PAGE ARE FROM THE BOTTOM SIDE OF THE MODULE
LC AND RC FRAME TYPES ARE MIRROR IMAGES OF EACHOTHER, SO ARE RM AND LM

LUMOS
555 Aspen Ridge Dr, Unit B
Lafayette, CO 80026
(303) 449-2394
www.lumossolar.com

DRAWING TITLE
VISION CONCEPT LAYOUTS

FILE NAME: Vision System Critical Dimensions Drawing

DISCLAIMER
THIS DRAWING IS THE PROPERTY OF LUMOS, LLC (LUMOS). THIS INFORMATION IS CONFIDENTIAL AND IS TO BE USED ONLY IN CONNECTION WITH THE WORK DESCRIBED BY LUMOS. NO PART IS TO BE DISCLOSED TO OTHERS WITHOUT WRITTEN PERMISSION FROM LUMOS.

DRAWN BY
KY, DG, BR

REVIEWED BY
NOT REVIEWED

REV 5

DATE
11/9/2022

ORIGINAL SIZE
11"X17"

SCALE
AS NOTED

SHEET/DRAWING NUMBER
3

AVAILABLE CELL MATRICES, S SERIES MODULES

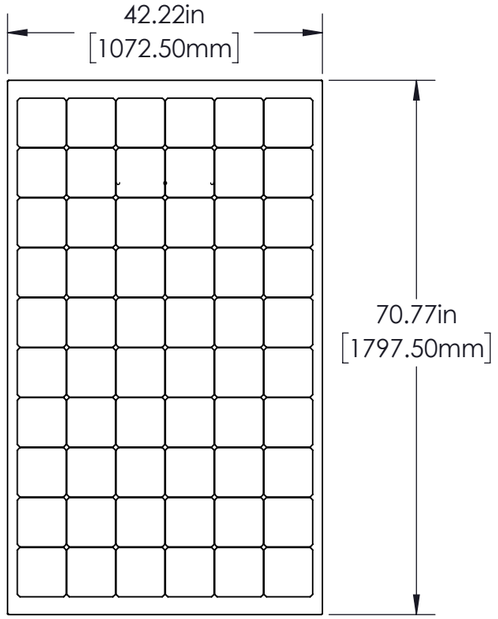

S60 Laminate
Light Transmittance*: 13%

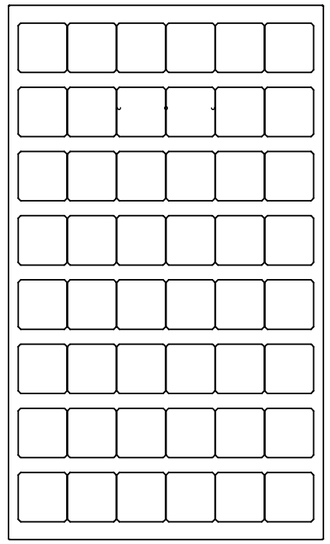

S48 Laminate
Light Transmittance: 28%

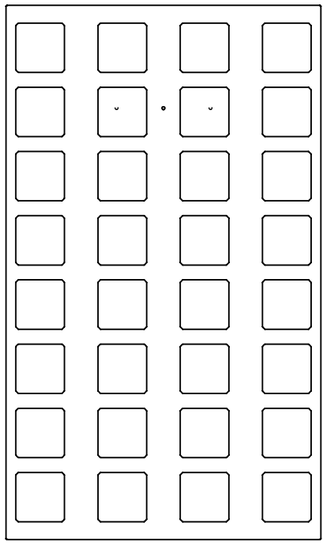

S32 Laminate
Light Transmittance: 47%

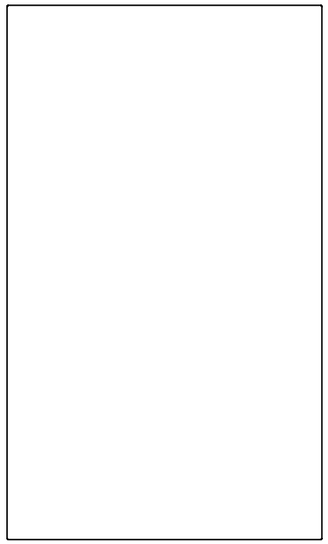

S0 Laminate
Light Transmittance: 85%

All S Series laminates come with the IM frame type:

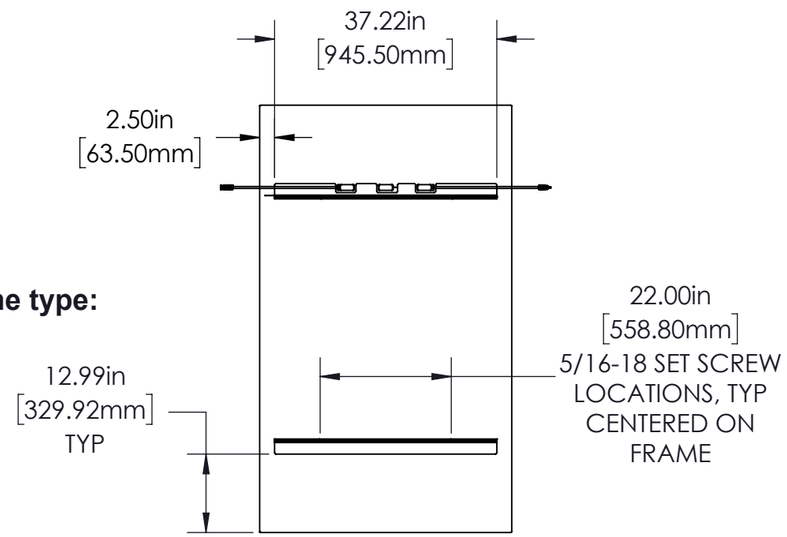

IM Frame

**Light transmission is the proportion of visible light at near-normal irradiance that is transmitted through the laminate. The mounting system obscures light transmission, and this is accounted for.*

LUMOS
555 Aspen Ridge Dr, Unit B
Lafayette, CO 80026
(303) 449-2394
www.lumossolar.com

DRAWING TITLE
VISION CONCEPT LAYOUTS

FILE NAME: Vision System Critical Dimensions Drawing

DISCLAIMER
THIS DRAWING IS THE PROPERTY OF LUMOS, LLC (LUMOS). THIS INFORMATION IS CONFIDENTIAL AND IS TO BE USED ONLY IN CONNECTION WITH WORK DESCRIBED BY LUMOS. NO PART IS TO BE DISCLOSED TO OTHERS WITHOUT WRITTEN PERMISSION FROM LUMOS.

DRAWN BY
KY, DG, BR

REVIEWED BY
NOT REVIEWED

REV 5

DATE
11/9/2022

ORIGINAL SIZE
11"X17"

SCALE
AS NOTED

SHEET/DRAWING NUMBER
4

VISION RAIL SPACING

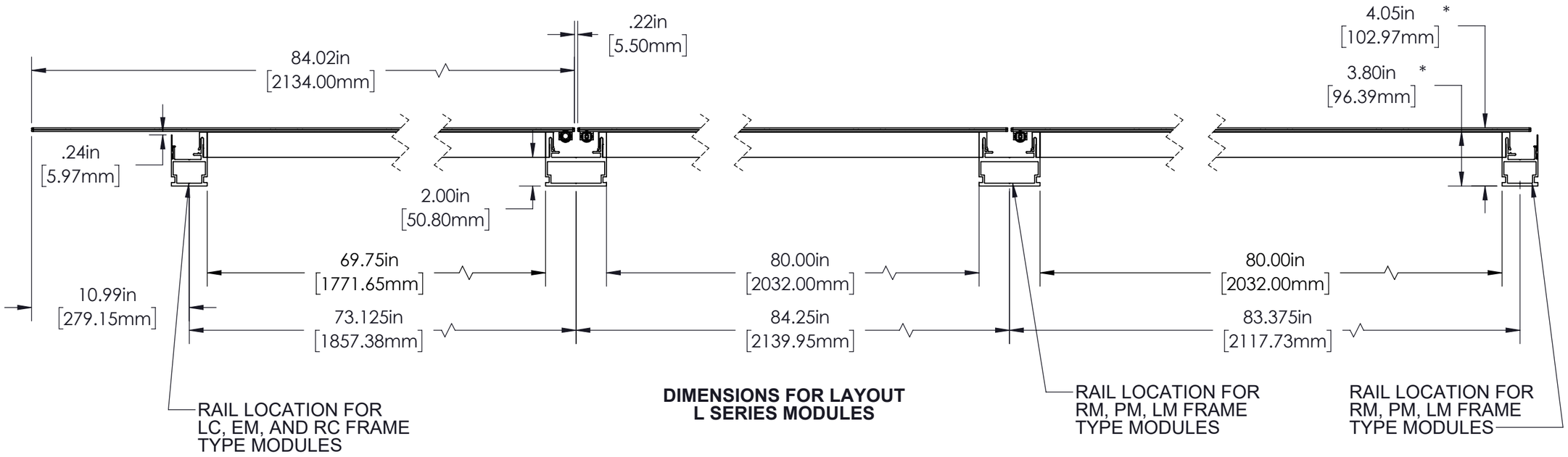

DIMENSIONS FOR LAYOUT
L SERIES MODULES

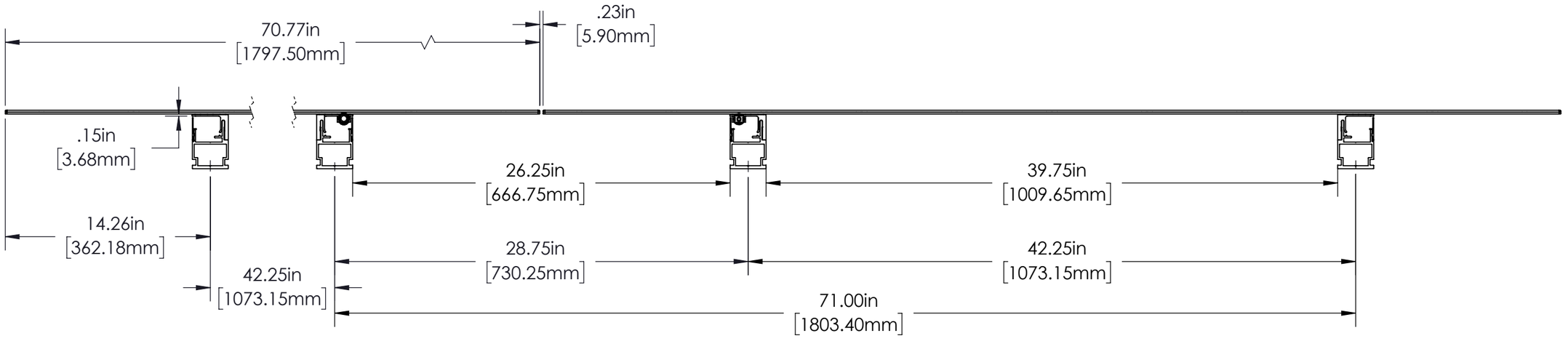

DIMENSIONS FOR LAYOUT
S SERIES MODULES

Notes:
* Dimension only applies to SD Rail profiles.
Tolerances are ±1/16" unless noted otherwise

LUMOS
555 Aspen Ridge Dr., Unit B
Lafayette, CO 80026
(303) 449-2394
www.lumossolar.com

DRAWING TITLE
VISION SYSTEM CRITICAL DIMENSIONS

FILE NAME: Vision System Critical Dimensions Drawing

DISCLAIMER
THIS DRAWING IS THE PROPERTY OF LUMOS, LLC (LUMOS). THIS INFORMATION IS CONFIDENTIAL AND IS TO BE USED ONLY IN CONNECTION WITH WORK DESCRIBED BY LUMOS. NO PART IS TO BE DISCLOSED TO OTHERS WITHOUT WRITTEN PERMISSION FROM LUMOS.

DRAWN BY
KY, DG, BR

INTERNALLY REVIEWED BY
KY

REV 5

DATE
11/9/2022

ORIGINAL SIZE
11"X17"

SHEET/DRAWING NUMBER
5

ALL INFORMATION IS SUBJECT TO CHANGE WITHOUT NOTICE

VISION RAIL PROFILES

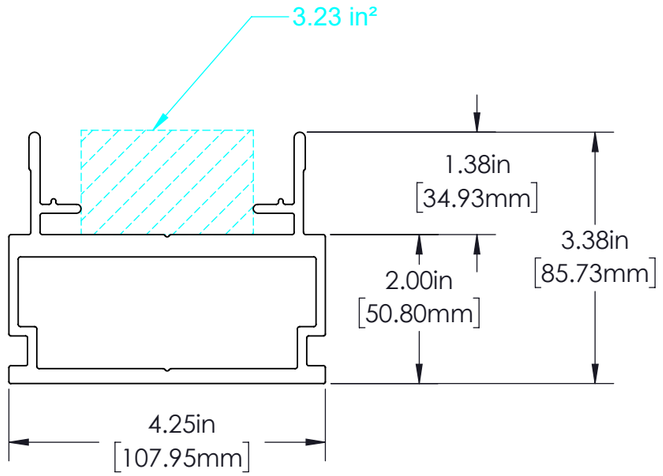

VISION SD SHARED RAIL

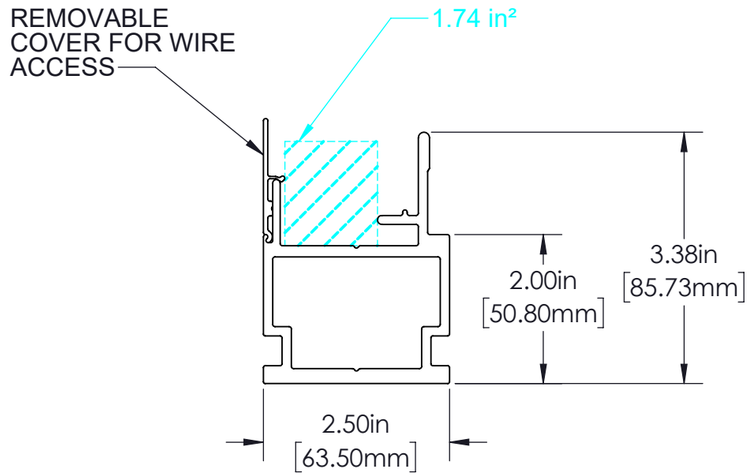

VISION SD EDGE RAIL

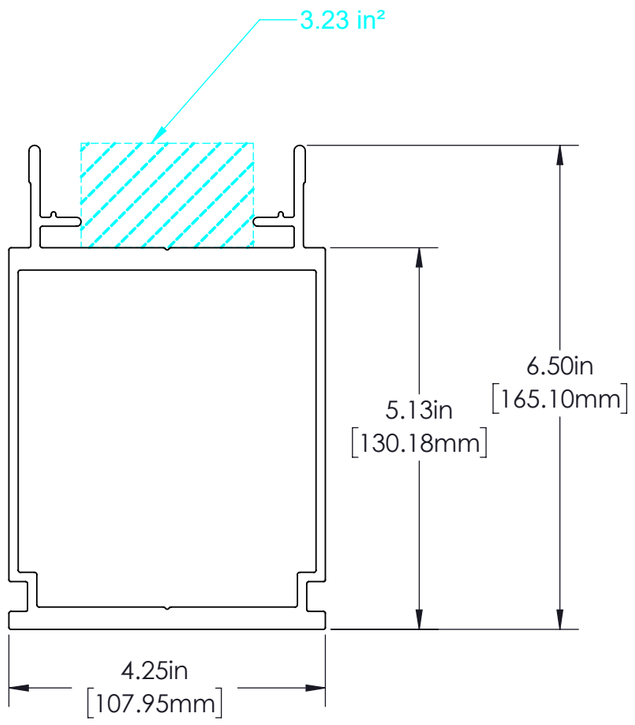

VISION MD SHARED RAIL

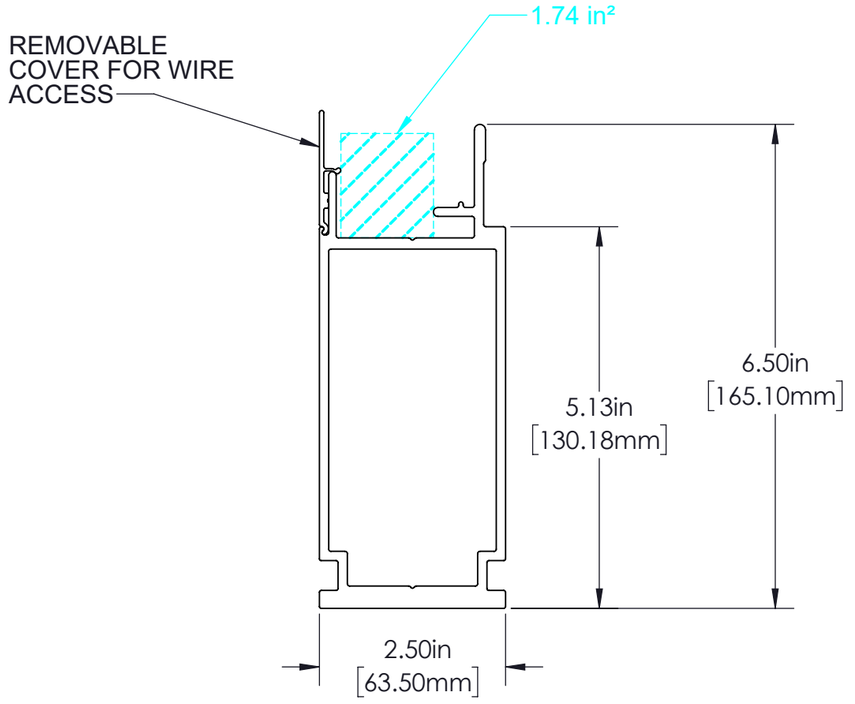

VISION MD EDGE RAIL

LUMOS
555 Aspen Ridge Dr., Unit B
Lafayette, CO 80026
(303) 449-2394
www.lumossolar.com

DRAWING TITLE
VISION SYSTEM CRITICAL DIMENSIONS

FILE NAME: Vision System Critical Dimensions Drawing

DISCLAIMER
THIS DRAWING IS THE PROPERTY OF LUMOS, LLC (LUMOS). THIS INFORMATION IS CONFIDENTIAL AND IS TO BE USED ONLY IN CONNECTION WITH WORK DESCRIBED BY LUMOS. NO PART IS TO BE DISCLOSED TO OTHERS WITHOUT WRITTEN PERMISSION FROM LUMOS.

DRAWN BY
KY, DG, BR

INTERNALLY REVIEWED BY
KY

REV 5

DATE
11/9/2022

ORIGINAL SIZE
11"X17"

SHEET/DRAWING NUMBER
7

ALL INFORMATION IS SUBJECT TO CHANGE WITHOUT NOTICE

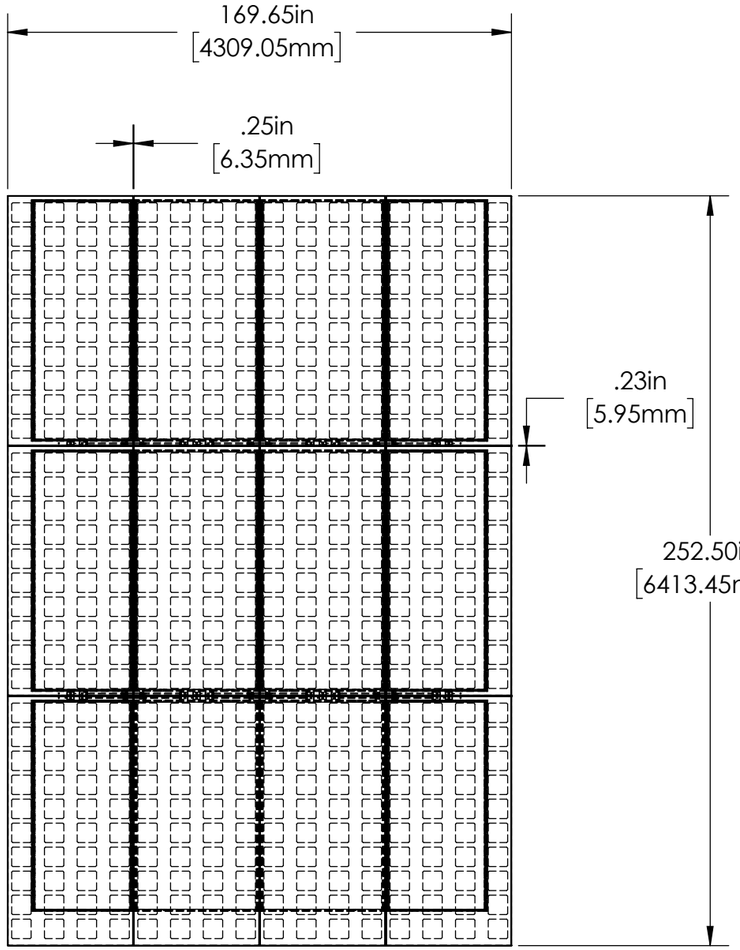

GAPS BETWEEN ADJACENT L SERIES MODULES

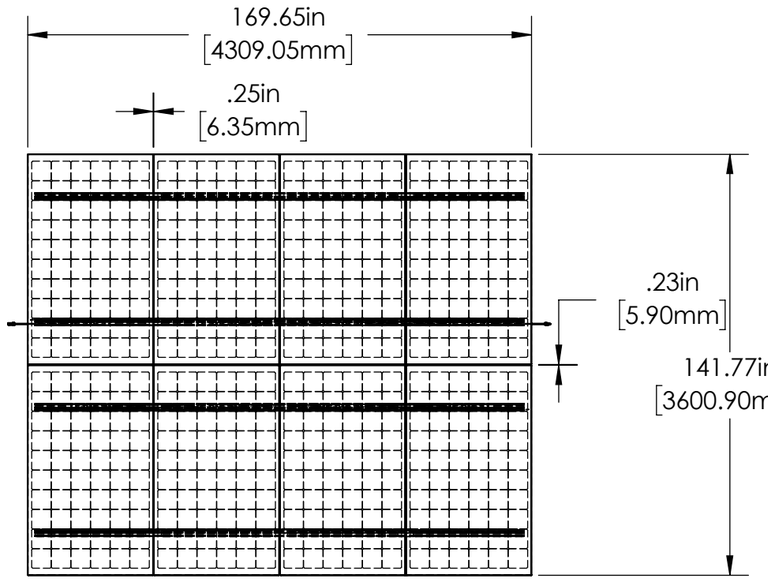

GAPS BETWEEN ADJACENT S SERIES MODULES

LUMOS
PO Box 3424
Nederland, CO 80466
(303) 449-2394
www.lumossolar.com

DRAWING TITLE
VISION SYSTEM CRITICAL DIMENSIONS

FILE NAME: Vision System Critical Dimensions Drawing

DISCLAIMER
THIS DRAWING IS THE PROPERTY OF LUMOS, LLC (LUMOS). THIS INFORMATION IS CONFIDENTIAL AND IS TO BE USED ONLY IN CONNECTION WITH WORK DESCRIBED BY LUMOS. NO PART IS TO BE DISCLOSED TO OTHERS WITHOUT WRITTEN PERMISSION FROM LUMOS.

DRAWN BY
KY, DG, BR

INTERNALLY REVIEWED BY
KY

REV 5

DATE
11/9/2022

ORIGINAL SIZE
11"X17"

SHEET/DRAWING NUMBER
8

ALL INFORMATION IS SUBJECT TO CHANGE WITHOUT NOTICE

Application Date: **Feb 28, 2024**

Project Address: **226 E Government Street**

Applicant: **Ashley King**

Applicant's Address: **850 Tchoupitulas Street, New Orleans, LA 70130**

Email: **aking@trapolinpeer.com** Phone: **504-215-2435**

Property Owner: **Robert B. and Janie A. Switzer; bobby.switzer@gmail.com**

(If different from Applicant)

District: ***PHD*** ☐ ***NHPD*** ☑ ***OEHPD*** ☐ ***PHBD*** ☐ ***GCD*** ☐

There is a $25 Application Fee for the following project types:

☑ Change of Paint Color(s)
Body: **SW 2832 Colonial Revival Gray**
Trim: **SW 7005 Pure White**
Accent: **(Front Door) SW 7607 Santorini Blue**

☐ New/Replacement Sign(s)
Sign Type:
Dimensions:
Colors:

☑ Minor Deviation to an Approved Project / Change of Roofing Material / Fence Solar Panels
Description: **Decorative Exterior Light fixtures for review.**
See attached regarding change to exterior railing approach.

(Office Use)

This request was reviewed and meets the criteria for an Abbreviated Review.

Adrianne J. Walker
ARB Secretary Signature

2/29/2024
Date

This request was reviewed and approved by the following members of the Architectural Review Board:

Yuri Ramos
2024.03.05
12:30:14-06'00'
Architect Signature / Date

Comments:
Recommend application approval, except for proposed light fixture "D". Recessed soffit lights may not be appropriate for a contributing structure of this style. Recommend light fixture "D" be submitted for full board review.

3-5-24
UWFHT Representative Signature / Date

Comments:

Planning Services
222 W. Main Street * Pensacola, Florida 32502
(850) 435-1670
Mail to: P.O. Box 12910 * Pensacola, Florida 32521

Item 7 509 E. Belmont Street OEHPD / Zone OEHR-2, City Council District 6
Alterations to a Non-Contributing Structure
Action Taken: Approved with comments

Karen Penn is seeking approval to renovate a noncontributing building. The scope of work will include replacing the existing siding with new Hardie lap siding, replace all windows with new vinyl windows, replace the front door with a new fiberglass door, replace the roof with new asphalt shingles, and to add new columns to the front porch. Except for the front windows which will be larger than the existing, all new windows will be sized to match the current openings with new fiber cement trim. Additionally, the side porch stairs will be replaced board for board with matching pressure treated wood.

Mr. Vargas presented to the board. Chairperson Salter read comments from Old East Hill and Mr. Vargas agreed that new siding exposure / reveal could be 6", that the front columns could be 4"x4" and that the side railing could be rounded with pickets. The applicant would like to keep the front door with the smaller panes of glass rather than larger for safety purposes. Chairperson Salter was too concerns with the proposed door panels since there were a number of examples in the neighborhood and since this property was noncontributing. He thought the overall improvements would be a great benefit. Board Member Yee asked is the windows should be 2/2 with a vertical muntin / grille. Chairperson Salter stated that a 2/2, 2/1, or a 1/1 would be appropriate for this house.

Board Member Courtney made the motion to approve with the clarification that the front windows are to be two individual windows, all windows be 2/2 (with a vertical muntin / grille) or 1/1 (no vertical muntin / grille), that the rails on the side porch be rounded with turned pickets or spindles (as opposed to a prefab railing), that the lap siding be installed to have 6" exposure / reveal, and that the front columns be 4"x4" (and not 6"x6"). Board Member Fogarty seconded the motion and it carried 6-0.

Item 8 226 E. Government Street PHD / Zone HC-1, City Council District 6
Exterior Alterations to a Contributing Structure
Action Taken: Approved as submitted

Ashley King is requesting final review for work to the exterior façade of a contributing structure, along with some exterior details and some exterior materials. For this application, the following is requested for review:

1. Final approval on the replaced rear addition;
2. Final approval on the proposed new openings;
3. Final approval on a new standing seam metal roof;
4. Final approval to replace the existing siding and trim elements with a new composite material matching the profile and thickness of the existing; and
5. Final approval for work to the porch and balcony elements.

Further information on colors, specific materials (such as shutters, porch screening, lighting, etc.), and the overall site plan, hardscapes, and accessory structures will be submitted in a future application. Conceptual review of this application was approved in March 2022 and, at that time, the use of the proposed composite siding was also approved with the board determining that it was visually above and beyond a typical Hardie application.

Ms. King presented to the board. Chairperson Salter reiterated previous concerns about the siding materials and asked for clarification that the other exterior elements would remain wood. Ms. King confirmed that all other elements will remain wood. Board Member Yee asked if there would be sheathing on the structure and Ms. King confirmed that they will be placing sheathing, insulation, weather barrier and new siding. Board Member Yee also asked if the new trim elements were to be

composite and Ms. King clarified that the only composite trim will be the flat trim that had direct relation to the weather proofing of the structure. Ms. King spoke briefly about the conceptual site plan. Chairperson Salter asked about the details of the solar paneling that will be added to the property. Ms. King clarified that there are no elevations as of now, but further details will be formally submitted at a later date. Assistant Planning & Zoning Division Manager Harding stated that planning did not have any issues from a general zoning perspective such as setbacks or coverage and that it will come down to the historic district requirements and details as a new accessory structure. It will have to be compatible with the main structure.
Board Member Ramos made the motion to approve the five items that were outlined in the package as submitted. Board Member Courtney seconded the motion and it carried 6-0.

Item 9 812 N. Barcelona Street NHPD / Zone PR-2, City Council District 6
Removal of Chimneys at a Contributing Structure
Action Taken: Approved as submitted
On November 8, 2022, Inspection Services issued a stop work order on permit 22-10-8014. The permit covered work to reroof the house with matching color asphalt shingles which was approved through an ARB board for board application in October 2022. During the project, two brick chimneys were removed. Both chimneys are reported to have been unsafe and with broken and degraded bricks. It was also reported that the homeowner received information from at least one contractor that restoring the chimneys would be very costly. Since the chimneys were completely removed and the reroof work was nearly completed, Inspection Services (in coordination with Planning Services) instructed the company to continue with the project but advised ARB input and review would be required before the permit could be closed. During consultation with the company, staff advised the chimneys could either be replaced and rebuilt in-kind or they could request ARB's approval to leave the chimneys off. Per the North Hill ordinance (sec. 12-3-10(2)), every application for a building permit to alter an exterior of a building requires ARB approval. The applicants have provided photographs of the chimneys can speak further on the condition of structures.
Mr. Guy presented to the board. Chairperson Salter read the North Hill comments and then commented on the position of the chimneys and how they were not necessarily visible from the street view. He continued that neither one of the chimneys represented a major feature to the overall architecture of the house. Advisor Pristera reflected Chairperson Salter's comments and reiterated that they are not a predominate architectural feature. He continued that it is a shame that more chimneys are not being cared for and that the board could possibly advocate better for historic chimneys. Assistant Planning & Zoning Division Manager Harding commented that staff was conflicted with how to handle this situation, he clarified that this item was presented so that the project could be finished, and the permit could be closed out. Advisor Pristera asked Assistant Planning & Zoning Division Manager Harding for clarification on whether or not the board has the ability to have replacement features added back onto structures for future applications that are similar to this situation. Assistant Planning & Zoning Division Manager Harding replied that in North Hill, if the project requires a permit, then based on his interpretation of the historic district ordinance, the board has the power to request the removed feature to be added back according to Sec. 12-3-10(2). Board Member Ramos asked if the chimneys were addressed in the ARB board for board application. Assistant Planning & Zoning Division Manager Harding responded that the chimneys were not addressed in the board for board nor the permit application. Board Member Courtney asked whether in the future chimneys can be flagged for further review for future board for board or permit applications. Assistant Planning & Zoning Division Manager Harding clarified that this situation was likely caused by various avenues of miscommunication. Otherwise, if a permit comes in and if the

TYPE	DESCRIPTION	OPENING		COMMENTS
		WIDTH	HEIGHT	
WN-A	SINGLE DOUBLE HUNG WINDOW	3'-4"	6'-8"	
WN-B	GANGED DOUBLE HUNG WINDOW	5'-8"	6'-8"	
WN-C	SINGLE DOUBLE HUNG WINDOW - COTTAGE	5'-8"	8'-8"	
WN-D	GANGED DOUBLE HUNG WINDOW - COTTAGE	3'-4"	8'-8"	
WN-E	SINGLE FIXED WINDOW	2'-0"	4'-2"	
WN-F	LOUVERED ATTIC VENT	2'-0"	4'-2"	

LEGEND: DOOR AND WINDOW RENOVATION SCOPE

- EXISTING OPENING TO BE REMOVED
- EXISTING OPENING TO BE SALVAGED FOR REUSE IN NEW LOCATION
- REMOVE NON-HISTORIC OPENING AND REPLACE WITH NEW OPENING MATCHING HISTORIC CONFIGURATION
- EXISTING OPENING: FRAME TO BE REPAIRED AND RECEIVE NEW WINDOW SASHES TO MATCH EXISTING
- NEW OPENING TO MATCH EXISTING



CONCEPTUAL APPROVAL AT NOV. 2022 ARB MEETING

SOUTH ELEVATION

SCALE: 3/16" = 1'-0"

TYPE	DESCRIPTION	OPENING		COMMENTS
		WIDTH	HEIGHT	
WN-A	SINGLE DOUBLE HUNG WINDOW	3'-4"	6'-8"	
WN-B	GANGED DOUBLE HUNG WINDOW	5'-8"	6'-8"	
WN-C	SINGLE DOUBLE HUNG WINDOW - COTTAGE	5'-8"	8'-8"	
WN-D	GANGED DOUBLE HUNG WINDOW - COTTAGE	3'-4"	8'-8"	
WN-E	SINGLE FIXED WINDOW	2'-0"	4'-2"	
WN-F	LOUVERED ATTIC VENT	2'-0"	4'-2"	

LEGEND: DOOR AND WINDOW RENOVATION SCOPE

- EXISTING OPENING TO BE REMOVED
- EXISTING OPENING TO BE SALVAGED FOR REUSE IN NEW LOCATION
- REMOVE NON-HISTORIC OPENING AND REPLACE WITH NEW OPENING MATCHING HISTORIC CONFIGURATION
- EXISTING OPENING: FRAME TO BE REPAIRED AND RECEIVE NEW WINDOW SASHES TO MATCH EXISTING
- NEW OPENING TO MATCH EXISTING



CONCEPTUAL APPROVAL AT NOV. 2022 ARB MEETING

EAST ELEVATION
SCALE: 3/16" = 1'-0"

TYPE	DESCRIPTION	OPENING		COMMENTS
		WIDTH	HEIGHT	
WN-A	SINGLE DOUBLE HUNG WINDOW	3'-4"	6'-8"	
WN-B	GANGED DOUBLE HUNG WINDOW	5'-8"	6'-8"	
WN-C	SINGLE DOUBLE HUNG WINDOW - COTTAGE	5'-8"	8'-8"	
WN-D	GANGED DOUBLE HUNG WINDOW - COTTAGE	3'-4"	8'-8"	
WN-E	SINGLE FIXED WINDOW	2'-0"	4'-2"	
WN-F	LOUVERED ATTIC VENT	2'-0"	4'-2"	

LEGEND: DOOR AND WINDOW RENOVATION SCOPE

- EXISTING OPENING TO BE REMOVED
- EXISTING OPENING TO BE SALVAGED FOR REUSE IN NEW LOCATION
- REMOVE NON-HISTORIC OPENING AND REPLACE WITH NEW OPENING MATCHING HISTORIC CONFIGURATION
- EXISTING OPENING: FRAME TO BE REPAIRED AND RECEIVE NEW WINDOW SASHES TO MATCH EXISTING
- NEW OPENING TO MATCH EXISTING



CONCEPTUAL APPROVAL AT NOV. 2022 ARB MEETING

NORTH ELEVATION
SCALE: 3/16" = 1'-0"

TYPE	DESCRIPTION	OPENING		COMMENTS
		WIDTH	HEIGHT	
WN-A	SINGLE DOUBLE HUNG WINDOW	3'-4"	6'-8"	
WN-B	GANGED DOUBLE HUNG WINDOW	5'-8"	6'-8"	
WN-C	SINGLE DOUBLE HUNG WINDOW - COTTAGE	5'-8"	8'-8"	
WN-D	GANGED DOUBLE HUNG WINDOW - COTTAGE	3'-4"	8'-8"	
WN-E	SINGLE FIXED WINDOW	2'-0"	4'-2"	
WN-F	LOUVERED ATTIC VENT	2'-0"	4'-2"	

LEGEND: DOOR AND WINDOW RENOVATION SCOPE

- EXISTING OPENING TO BE REMOVED
- EXISTING OPENING: FRAME TO BE REPAIRED AND RECEIVE NEW WINDOW SASHES TO MATCH EXISTING
- EXISTING OPENING TO BE SALVAGED FOR REUSE IN NEW LOCATION
- NEW OPENING TO MATCH EXISTING
- REMOVE NON-HISTORIC OPENING AND REPLACE WITH NEW OPENING MATCHING HISTORIC CONFIGURATION



WEST ELEVATION

SCALE: 3/16" = 1'-0"



PERSPECTIVE FROM STREET - EXISTING



PERSPECTIVE FROM STREET - PROPOSED

CONCEPTUAL APPROVAL AT NOV. 2022 ARB MEETING

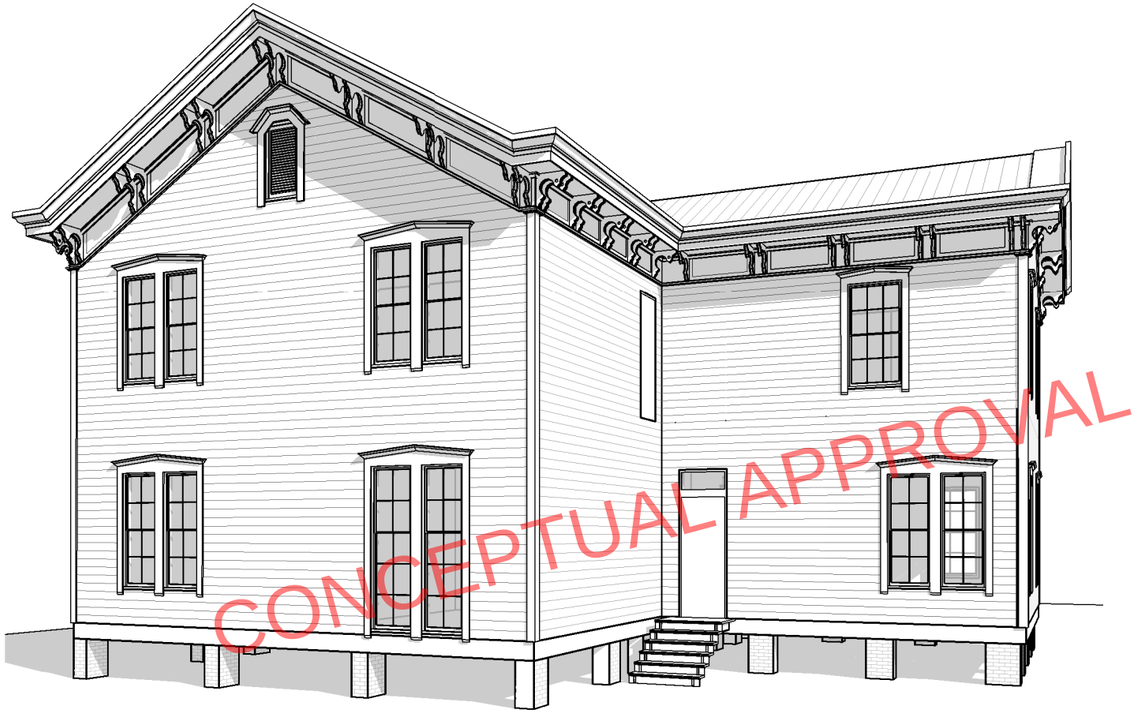

PERSPECTIVE FROM BACKYARD - EXISTING



PERSPECTIVE FROM BACKYARD - PROPOSED

CONCEPTUAL APPROVAL AT NOV. 2022 ARB MEETING



A: PRIMARY SCONCE



B: HANGING



C: SECONDARY SCONCE



D: RECESSED AT EAVE



1 ELEVATION - EXTERIOR LIGHTS
E.2 SCALE: 3/16" = 1'-0"

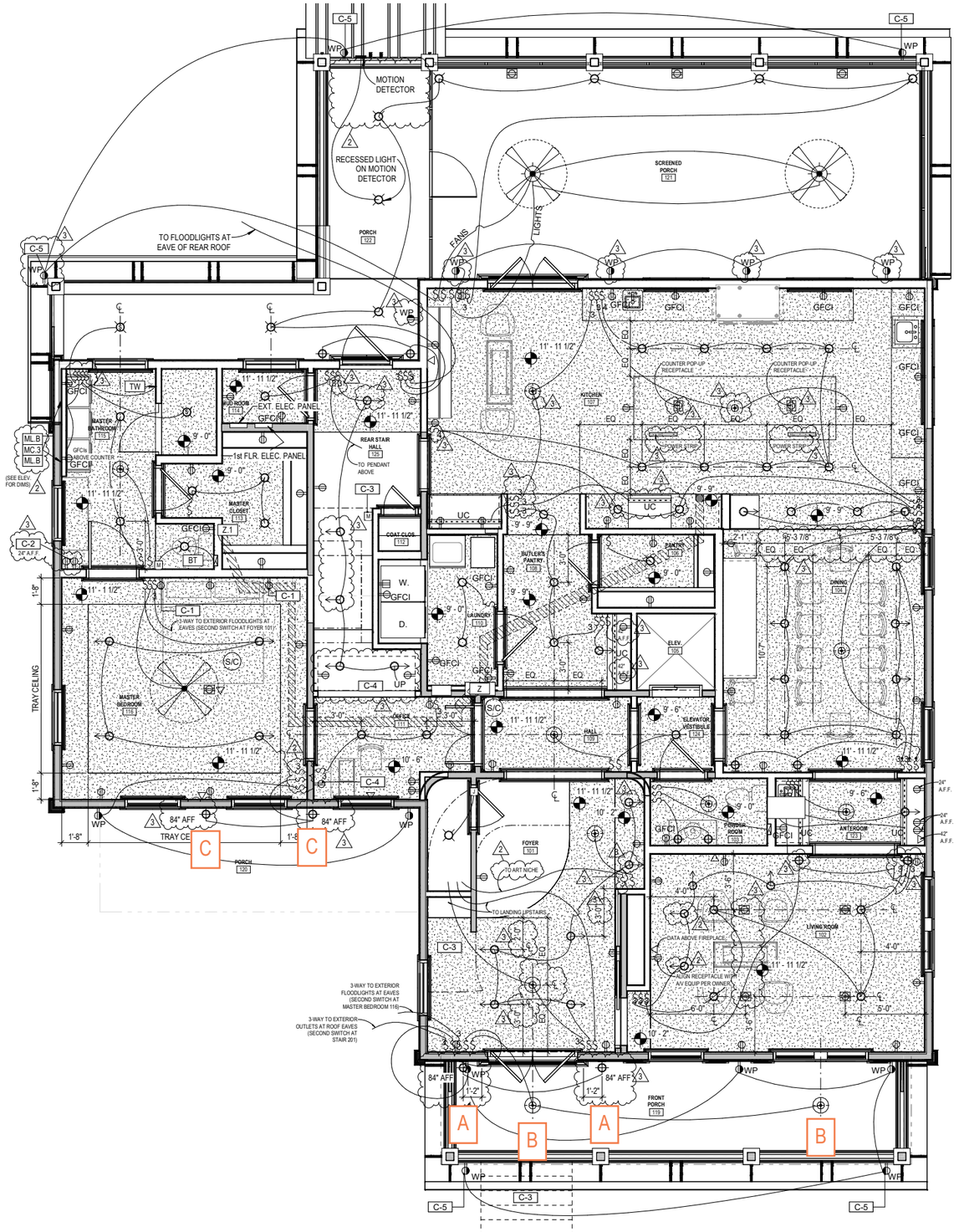

1 FIRST FLOOR RCP
E.3 SCALE: 1/4" = 1'-0"

REFLECTED CEILING/ELECTRICAL LEGEND

LIGHT FIXTURE SYMBOL
X-# CIRCUIT (TO CORRESPONDING SWITCH)
LIGHT FIXTURE MARK

	RECESSED DOWNLIGHT	J	JAMB SWITCH
	DECORATIVE FIXTURE/CHANDELIER	M	SWITCH WITH MOTION SENSOR
	DIRECTIONAL WALL-WASH RECESSED LT.	$^{\#}$	LIGHT SWITCH ("#" INDICATES MULTIWAY)
	SUSPENDED CEILING FAN WITH LIGHT KIT	D	DIMMING LIGHT SWITCH
	SUSPENDED CEILING FAN - FAN ONLY		DUPLEX RECEPTACLE
	WALL MOUNTED SCONCE	GFCI	GFCI DUPLEX RECEPTACLE
UC	UNDER CABINET TAPE LIGHT	WP	WEATHERPROOF DUPLEX RECEPTACLE
S/C	COMBINATION SMOKE/CO DETECTOR	P	WALL OUTLET WITH SURGE PROTECTION
	DATA		FLOOR OUTLET
	BATHROOM EXHAUST FAN		DUPLEX RECEPTACLE - SWITCHED
	WALL-RECESSED BATHROOM EXHAUST FAN		FLOODLIGHTS
	CEILING LINEAR LIGHT		

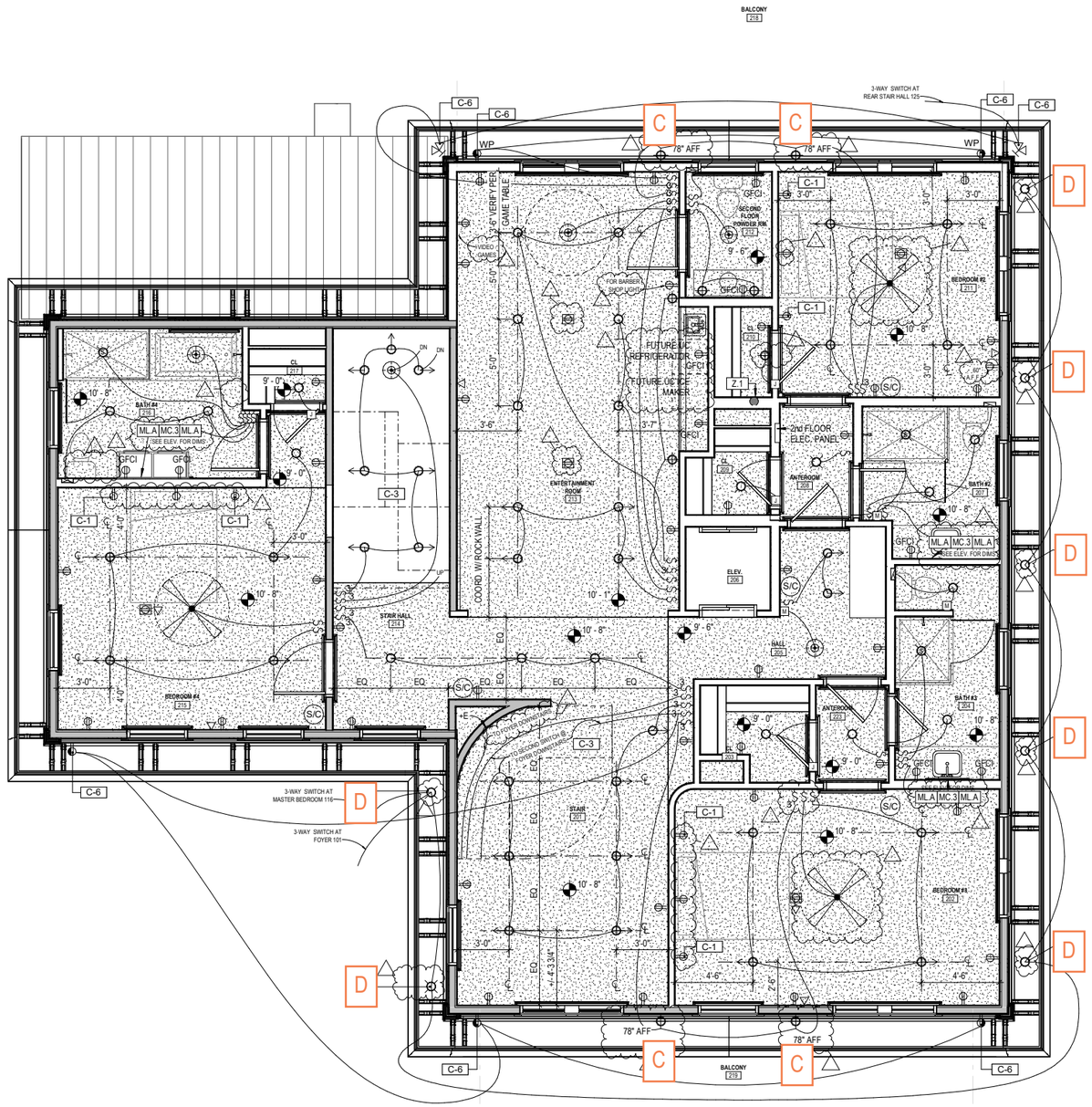

1 SECOND FLOOR RCP
E.4 SCALE: 1/4" = 1'-0"

REFLECTED CEILING/ELECTRICAL LEGEND

LIGHT FIXTURE SYMBOL
X-# CIRCUIT (TO CORRESPONDING SWITCH)
LIGHT FIXTURE MARK

	RECESSED DOWNLIGHT	J	JAMB SWITCH
	DECORATIVE FIXTURE/CHANDELIER	M	SWITCH WITH MOTION SENSOR
	DIRECTIONAL WALL-WASH RECESSED LT.	$^{\#}$	LIGHT SWITCH ("#" INDICATES MULTIWAY)
	SUSPENDED CEILING FAN WITH LIGHT KIT	^{D}	DIMMING LIGHT SWITCH
	SUSPENDED CEILING FAN - FAN ONLY		DUPLEX RECEPTACLE
	WALL MOUNTED SCONCE	GFCI	GFCI DUPLEX RECEPTACLE
UC	UNDER CABINET TAPE LIGHT	WP	WEATHERPROOF DUPLEX RECEPTACLE
S/C	COMBINATION SMOKE/CO DETECTOR	P	WALL OUTLET WITH SURGE PROTECTION
	DATA		FLOOR OUTLET
	BATHROOM EXHAUST FAN		DUPLEX RECEPTACLE - SWITCHED
	WALL-RECESSED BATHROOM EXHAUST FAN		FLOODLIGHTS
	CEILING LINEAR LIGHT		

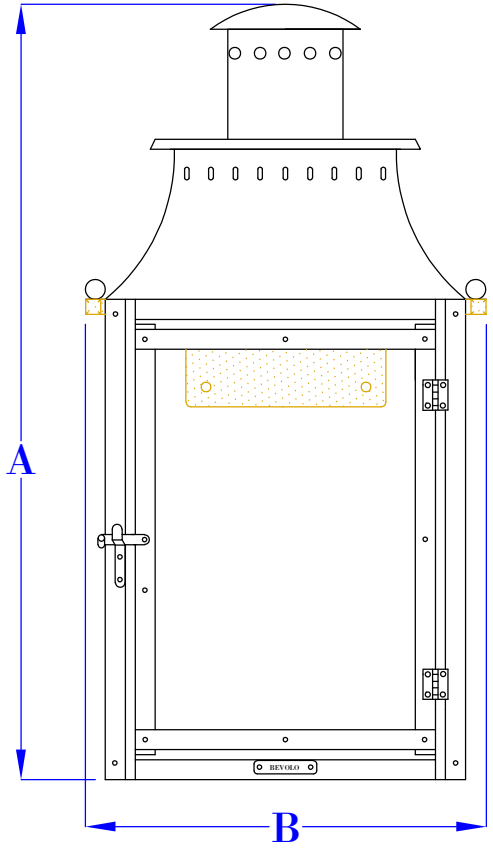

FRONT VIEW
(16" VERSION SHOWN)

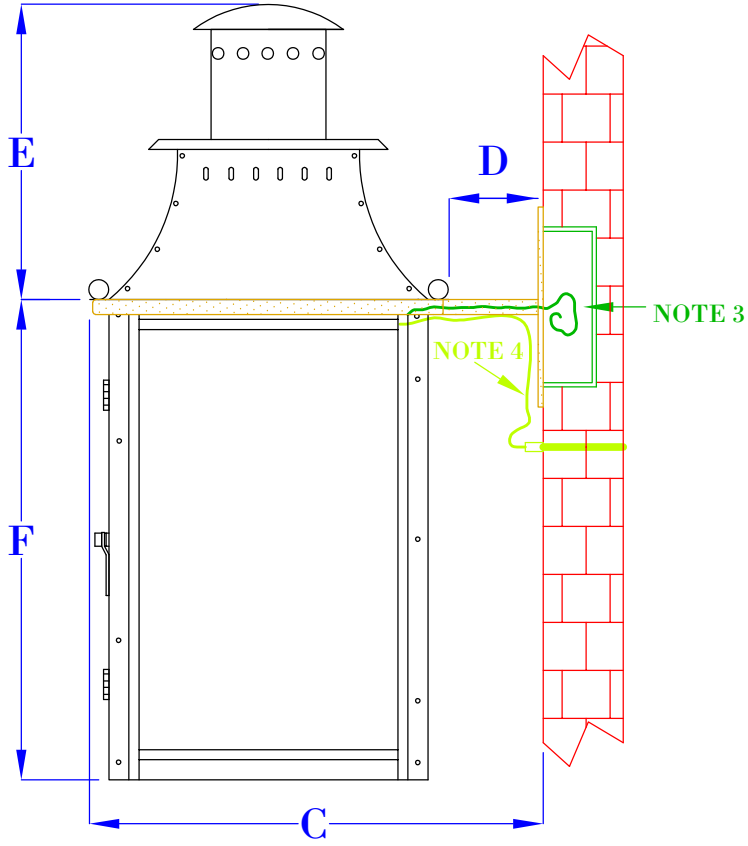

SIDE VIEW
(16" VERSION SHOWN)

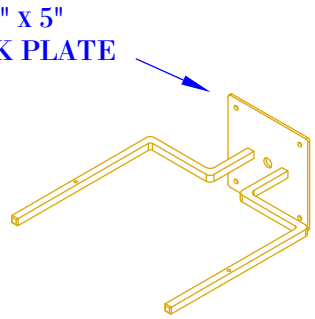

ISO VIEW
(NTS- BRACKET ONLY)

A

NOTE 5

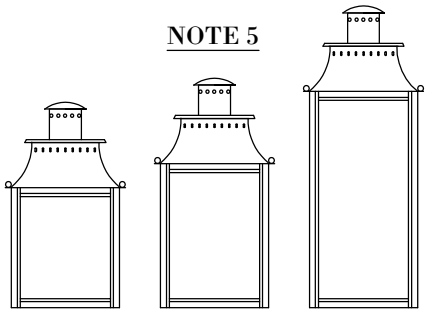

14" WMB 16" WMB 22" WMB

SIZE:	14"	16"	22"
A:	17 1/2"	19 1/2"	25 1/2"
B:	10 1/8"	10 1/8"	10 1/8"
C:	11 5/8"	11 5/8"	11 5/8"
D:	2 1/2"	2 1/2"	2 1/2"
E:	4"	4"	4"
F:	10 1/8"	12 1/8"	18 1/8"

NOTES:

1. MOUNTING HARDWARE SUPPLIED BY OTHERS
2. FIXTURES ARE HANDCRAFTED. DIMENSIONS MAY VARY PLUS OR MINUS $\frac{1}{4}$"
3. ELECTRIC LIGHTS SUPPLIED WITH 18/2 WIRE WITH GROUND
4. GAS LIGHTS SUPPLIED WITH $\frac{3}{16}$" COPPER GAS LINE AND $\frac{3}{16}$" x $\frac{1}{4}$" GAS LINE ADAPTOR
5. PROPORTIONS FOR EACH SIZE CHANGE. 16" IS REPRESENTED ABOVE, THUMBNAILS TO THE RIGHT SHOW ALL FOR COMPARISON.

BEVOLO GAS & ELECTRIC LIGHTS

LIGHT:	WILLIAMSBURG W/ STACK 14", 16", 22"	DATE:	DRW BY:	JJG
			APP. BY:	JJG
BRACKET:	BRACKET MOUNT	12-3-21	REVISION:	3

COPYRIGHT 2021, BEVOLO GAS & ELECTRIC LIGHTS. DRAWINGS & DESIGNS ARE OWNED BY BEVOLO AND REMAIN THE SOLE AND EXCLUSIVE PROPERTY OF BEVOLO GAS & ELECTRIC LIGHTS. DRAWINGS AND DESIGNS SHALL NOT BE DUPLICATED IN WHOLE OR PART.

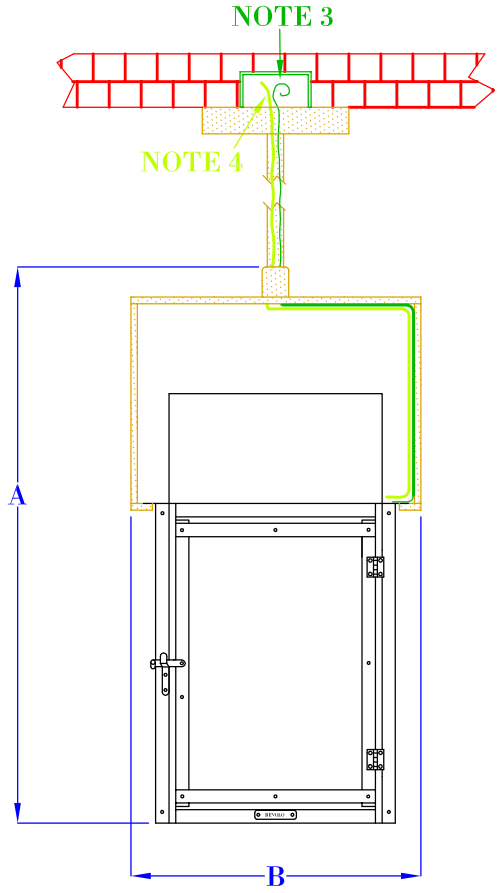

FRONT VIEW
(NTS)

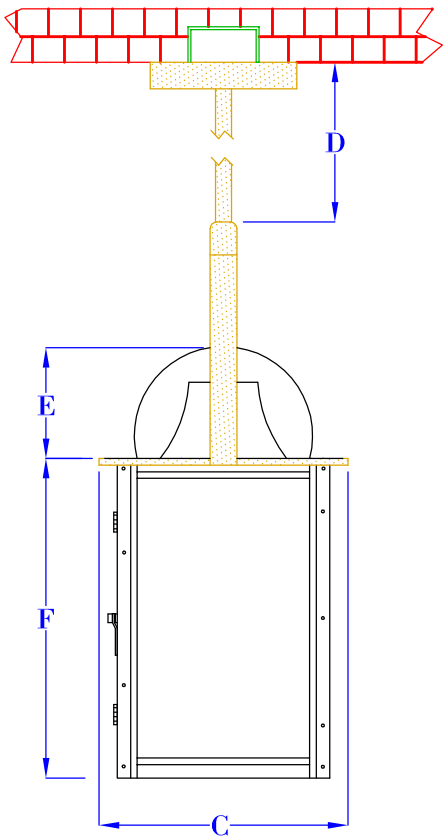

SIDE VIEW
(NTS)

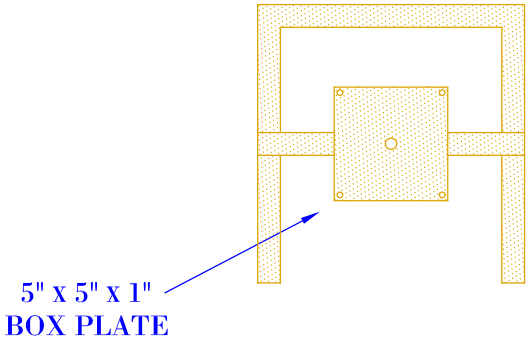

TOP VIEW
(NTS- BRACKET ONLY)

NOTES:

1. MOUNTING HARDWARE SUPPLIED BY OTHERS
2. FIXTURES ARE HANDCRAFTED. DIMENSIONS MAY VARY PLUS OR MINUS $\frac{1}{4}$"
3. ELECTRIC LIGHTS SUPPLIED WITH 18/2 WIRE WITH GROUND
4. GAS LIGHTS SUPPLIED WITH $\frac{3}{16}$" COPPER GAS LINE AND $\frac{3}{16}$" x $\frac{1}{4}$" GAS LINE ADAPTOR

B

SIZE:	14"	16"	22"
A:	20 $\frac{7}{8}$"	22 $\frac{7}{8}$"	28 $\frac{7}{8}$"
B:	10 $\frac{7}{8}$"	10 $\frac{7}{8}$"	10 $\frac{7}{8}$"
C:	9 $\frac{3}{8}$"	9 $\frac{3}{8}$"	9 $\frac{3}{8}$"
D:	VARIES	VARIES	VARIES
E:	4 $\frac{1}{8}$"	4 $\frac{1}{8}$"	4 $\frac{1}{8}$"
F:	10 $\frac{1}{8}$"	12 $\frac{1}{8}$"	18 $\frac{1}{8}$"

BEVOLO GAS & ELECTRIC LIGHTS

			DRW BY:	JJG	COPYRIGHT 2015, BEVOLO GAS & ELECTRIC LIGHTS. DRAWINGS & DESIGNS ARE OWNED BY BEVOLO AND REMAIN THE SOLE AND EXCLUSIVE PROPERTY OF BEVOLO GAS & ELECTRIC LIGHTS. DRAWINGS AND DESIGNS SHALL NOT BE DUPLICATED IN WHOLE OR PART.
LIGHT:	14", 16", 22" COTTON EXCHANGE	DATE:	APP. BY:	MAJ	
BRACKET:	SQUARE YOKE	5-29-15	REVISION:	1	

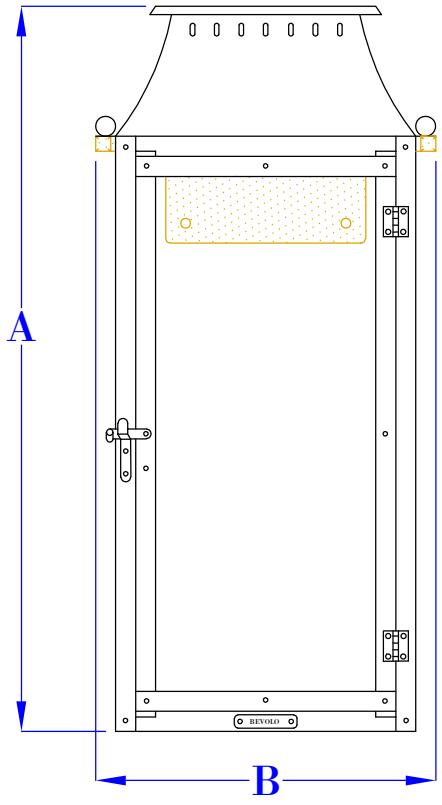

FRONT VIEW

(18" VERSION SHOWN)

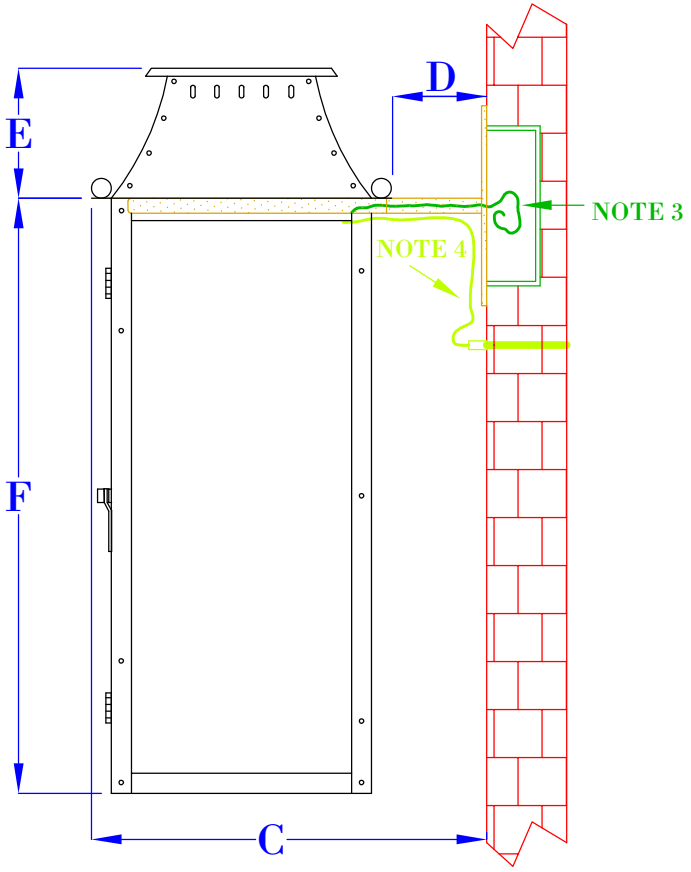

SIDE VIEW

(18" VERSION SHOWN)

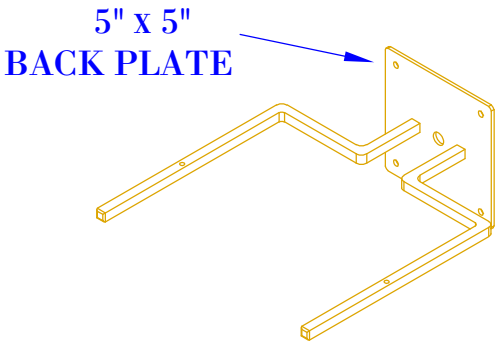

ISOMETRIC VIEW

(NTS- BRACKET ONLY)

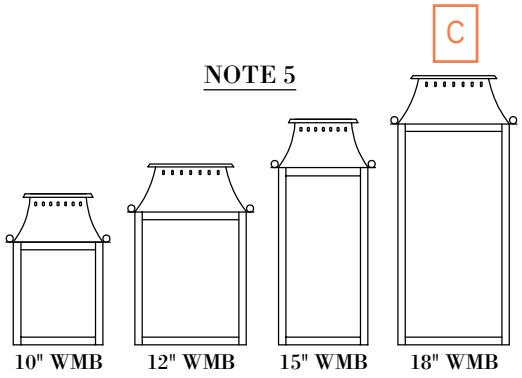

SIZE:	10"	12"	15"	18"
A:	10 1/8"	12 1/8"	15 1/8"	18 1/8"
B:	7 1/4"	8 3/4"	7 1/4"	8 3/4"
C:	8 5/8"	10 1/8"	8 5/8"	10 1/8"
D:	2 1/2"	2 1/2"	2 1/2"	2 1/2"
E:	3 1/4"	3 1/4"	3 1/4"	3 1/4"
F:	6 7/8"	8 7/8"	11 7/8"	14 7/8"

NOTES:

1. MOUNTING HARDWARE SUPPLIED BY OTHERS
2. FIXTURES ARE HANDCRAFTED. DIMENSIONS MAY VARY PLUS OR MINUS $\frac{1}{4}$"
3. ELECTRIC LIGHTS SUPPLIED WITH 18/2 WIRE WITH GROUND
4. GAS LIGHTS SUPPLIED WITH $\frac{3}{16}$" COPPER GAS LINE AND $\frac{3}{16}$" x $\frac{1}{4}$" GAS LINE ADAPTOR
5. PROPORTIONS FOR EACH SIZE CHANGE. 18" IS REPRESENTED ABOVE, THUMBNAILS TO THE RIGHT SHOW ALL FOR COMPARISON
6. 10", 12" SIZES ARE NOT SOLD IN GAS

BEVOLO GAS & ELECTRIC LIGHTS

LIGHT:	WILLIAMSBURG 10", 12", 15", 18"	DATE:	APP. BY:	JJG
BRACKET:	BRACKET MOUNT	2-2-22	REVISION:	2

DRW BY: JJG

COPYRIGHT 2022, BEVOLO GAS & ELECTRIC LIGHTS. DRAWINGS & DESIGNS ARE OWNED BY BEVOLO AND REMAIN THE SOLE AND EXCLUSIVE PROPERTY OF BEVOLO GAS & ELECTRIC LIGHTS. DRAWINGS AND DESIGNS SHALL NOT BE DUPLICATED IN WHOLE OR PART.

Regressed gimbal downlight with thin trim

WET | LOW-GLARE | 30° SWIVEL/DIRECTIONAL | ENERGY STAR | Intertek | IC RATED

This versatile modern thin-trim 2-, 4-, and 6-inch gimbal with multi-directional adjustable swivel produces high light output with minimal glare as a result of its regressed light source. Ideal for general lighting or for areas requiring a directional light to showcase unique elements or to create dramatic wall-wash effects.







Model	Size	Watts	Delivered lumens	LED lumens	CRI	Color °T	Voltage
RGM2-3K	2"	8 W	660 lm	800 lm	90	3000 K	120 V
RGM4-3K	4"	12 W	1050 lm	1400 lm	90	3000 K	120 V
RGM6-3K	6"	15 W	1270 lm	1700 lm	90	3000 K	120 V

Specifications

Every fixture includes a junction box with integrated dimmable driver
Can be daisy chained
Superior LED performance and lifespan
Regressed light source
Minimal heat emission
Aluminum construction
IC certification (suitable for direct contact with insulation)
Air-tight certified as per ASTM E283-04
40° beam angle
30° tilting, 360° rotation
Suitable for wet locations
Refer to website for dimmer compatibility
Ideal operating temperature: -20° to 40° C
5-year warranty

Finish

BK Black
SN Satin Nickel
WH White

Accessories

RFP-UNI
Universal rough-in plate

RFP-23
Rough-in plate for 2" and 3" models

RFP-46
Rough-in plate for 4" and 6" models

Order example

RGM6-3K-SN
6" gimbal recessed downlight with 1270 Lumens at 3000 K in a satin nickel finish

Note
Other Color °T and Finishes available, but may require MOQ's and longer lead times. Please contact your DALS representative for more information.

D

RGM2

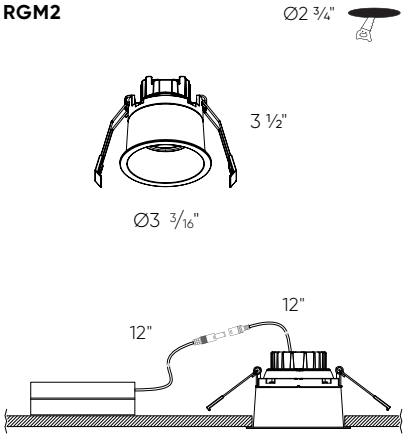

3 ⅞" x 2 ½" x 1 ½"

RGM4

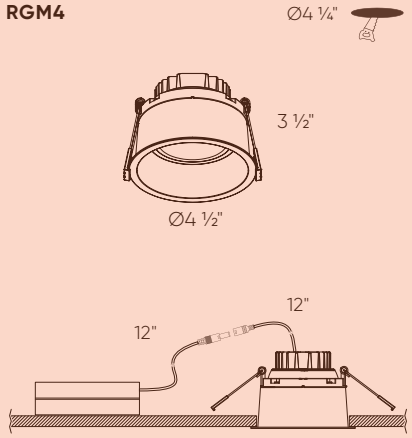

3 ⅞" x 2 ½" x 1 ½"

RGM6

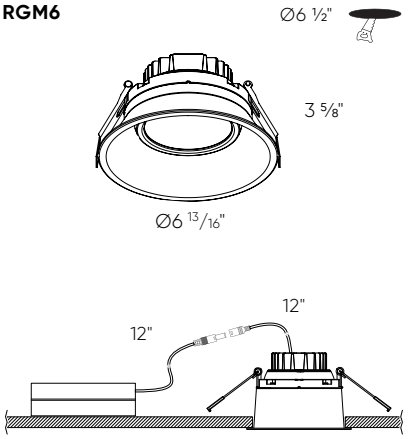

3 ⅞" x 2 ½" x 1 ½"

File #: 24-290 | Architectural Review Board | 3/21/2024

LEGISLATIVE ACTION ITEM

SUBJECT:

10 S. Jefferson Street
Palafox Historic Business District / Zone C-2A / City Council District 6
Final Approval for Internally Illuminated On-Premises Menu Signs for a Non-Contributing Structure

SUMMARY:

John Mascia and Steve Del Gallo are seeking final approval for two internally illuminated on-premises menu signs for a non-contributing structure. Internal illumination is prohibited in the Palafox Historic Business District per Sec. 12-3-27(f)(4)a.5. that states "Internally illuminated signs shall be prohibited." The prohibition of internally illuminated signs was referenced at the May 2023 ARB in which the exterior alterations for the property were approved; the minutes from the May 2023 meeting are included as an attachment.
The pre-order on-premises menu sign measures roughly 2.5 ft. by 4 ft. and the ordering sign measures roughly 5 ft. by 4.5 ft. with a canopy covering above measuring 5 ft. 10 in. by 7 ft. 2 in. and a speaker box below. The applicants submitted an abbreviated review for static or unlit on-premises menu signs that are code compliant, which was referred to the board for discussion based on it being a new sign type and installation for the district that should be discussed by the full board. The abbreviated review is supplied as an attachment. Rather than pursue the static option, the applicants submitted a full board application for internally illuminated on-premises menu signs.

RECOMMENDED CODE SECTIONS
Sec. 12-3-27(f)(4)a.5. Palafox Historic Business District; Architectural review of proposed exterior development; Board review standards; Signs.
Sec. 12-5-4(g)(2) Permanent accessory signs; Other permanent signs.
Sec. 12-13-1 Definitions; Sign.

ATTACHMENTS:

1. Images
2. Application and Materials
3. 5-18-23 ARB minutes
4. Static Menu Sign Abbreviated Review Application

10 S. Jefferson Street





City of Pensacola
America's First Settlement
And Most Historic City

Architectural Review Board Application
Full Board Review

Application Date: 02/26/24

***Project Address*:** **10 South Jefferson St, Pensacola FL 32502**

Applicant: Salad n Dash - John Mascia/Steve Delgallo

Applicant's Address: 10 South Jefferson St, Pensacola FL 32502

Email: *jmascia@comcast.net - leterip2@icloud.com* Phone: 617-504-6634

Property Owner: Steve Delgallo
(If different from Applicant)

District: ☐ ***PHD*** ☐ ***NHPD*** ☐ ***OEHPD*** ☑ ***PHBD*** ☐ ***GCD***

Application is hereby made for the project as described herein:

☐ Residential Homestead – $50.00 hearing fee

☑ Commercial/Other Residential – $250.00 hearing fee

** An application shall be scheduled to be heard once all required materials have been submitted and it is deemed complete by the Secretary to the Board. You will need to include eight (8) copies of the required information. Please see pages 3 – 4 of this application for further instruction and information.*

Project specifics/description:
PLEASE SPECIFY IF CONCEPTUAL DISCUSSION ITEM, CONCEPTUAL REVIEW, OR FINAL REVIEW.

This application is in reference to the final review/approval for a digital drive thru ordering menu at Salad n Dash located at 10 South Jefferson St, Pensacola, FL, 32502. Please see additional information and specifications located in the following pages of this application.

I, the undersigned applicant, understand that payment of these fees does not entitle me to approval and that no refund of these fees will be made. I have reviewed the applicable zoning requirements and understand that I must be present on the date of the Architectural Review Board meeting.

Applicant Signature Date

Planning Services
222 W. Main Street * Pensacola, Florida 32502
(850) 435-1670
Mail to: P.O. Box 12910 * Pensacola, Florida 32521

Drive Thru Menu Boards

Full Review Request

We are submitting this application for the request to accept the digital drive-thru menu display. The client was told they would be allowed to have a drive-thru sign when applying for original permitting and business license with the city. It has been clear since the beginning of submittals that this was a drive-thru concept. This display does not face the street or have any visible advertising value for passing traffic. It will only be used as intended, for the purpose of drive-thru patrons and ordering efficiently.

- From previous notes, one of the issues noted was the internal illumination. The drive-thru menu is composed of digital monitors and does not have any internal illumination. This is the standard on drive-thru menus today. Static menu boards are systematically being phased out of drive-thru concepts given their inability to adjust product selection on the fly which is necessary in today's QSR sales environment. The digital drive-thru board of today is something that needs to be dynamic for the needs of the business. It connects with online orders and matches promotions. Having a non-lit or static board is something that at this point would hold back the progress of the business and limit business into the future. Allowing a static menu board lit from a remote spot fixture will be no different from the proposed digital screen as seen by the public from the bordering streets which will be very minimal. With constant product and pricing changes in the restaurant/food industry a digital monitor is the only way to maintain accurate and up to date pricing. A static display will cause unnecessary costs with constant changes and reprints for the menu. We would also like to note the menu does not face the street and is tucked away mid property behind vegetation. Additional notes below:

    - There was mention of the digital monitor not conforming but there are digital monitors everywhere in the PHBD. We ask that this be treated similarly to any of the many ATMs that are located throughout downtown and PHBD. This is not an advertising element of signage and only a mode of communication with the patron/client just as the ATMS function.
    - The screens also can be set to timers that will only have the monitors on during business hours.
    - There is an ambient light sensor that will make sure the screens overall are not too bright at night to distract any surrounding viewing.
    - The displays can be set to invert to a black background during nighttime hours to further reduce their brightness/visibility for the drive-thru patrons.

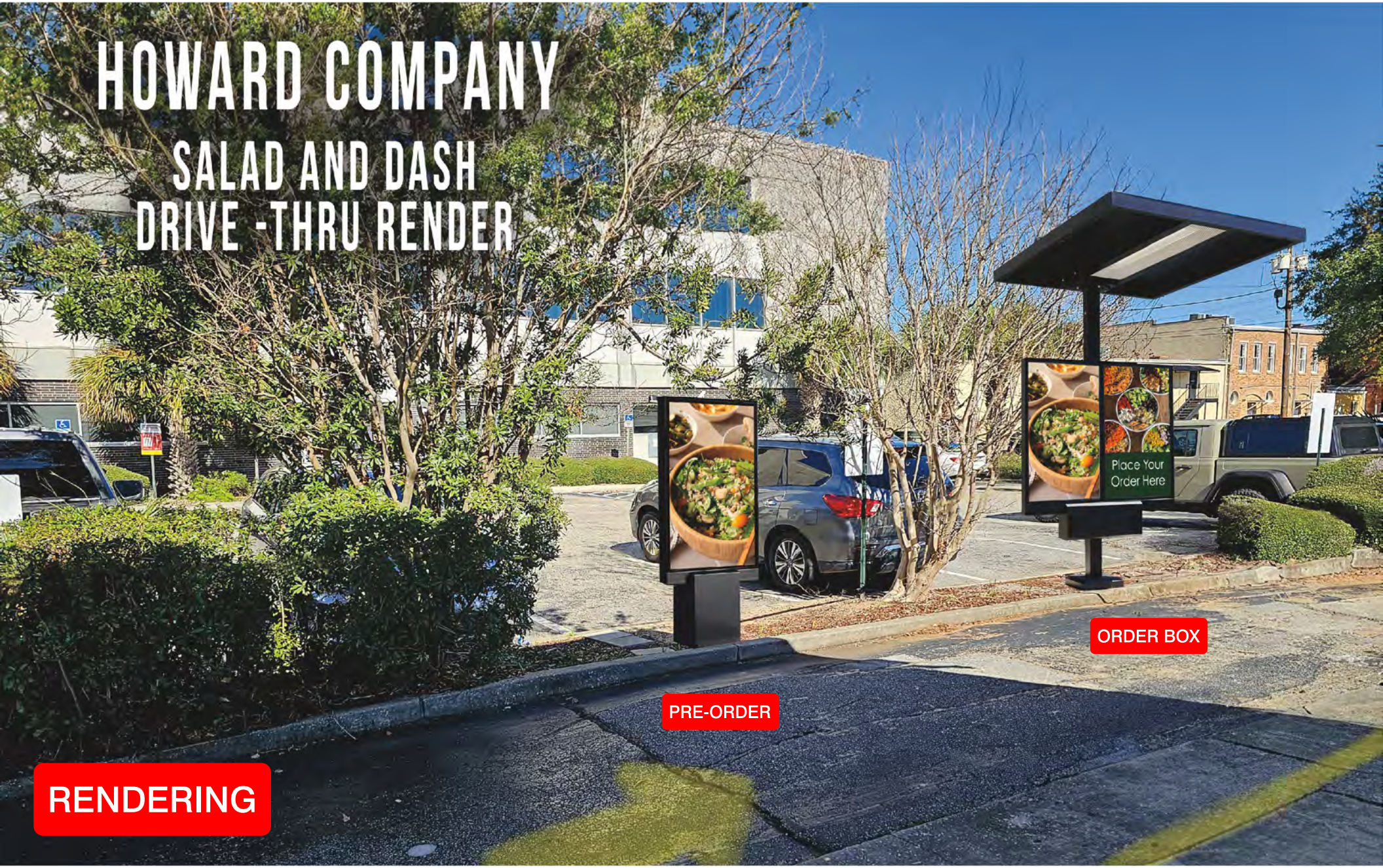
HOWARD COMPANY
SALAD AND DASH
DRIVE -THRU RENDER
Place Your
Order Here
ORDER BOX
PRE-ORDER
RENDERING

SITE MAP

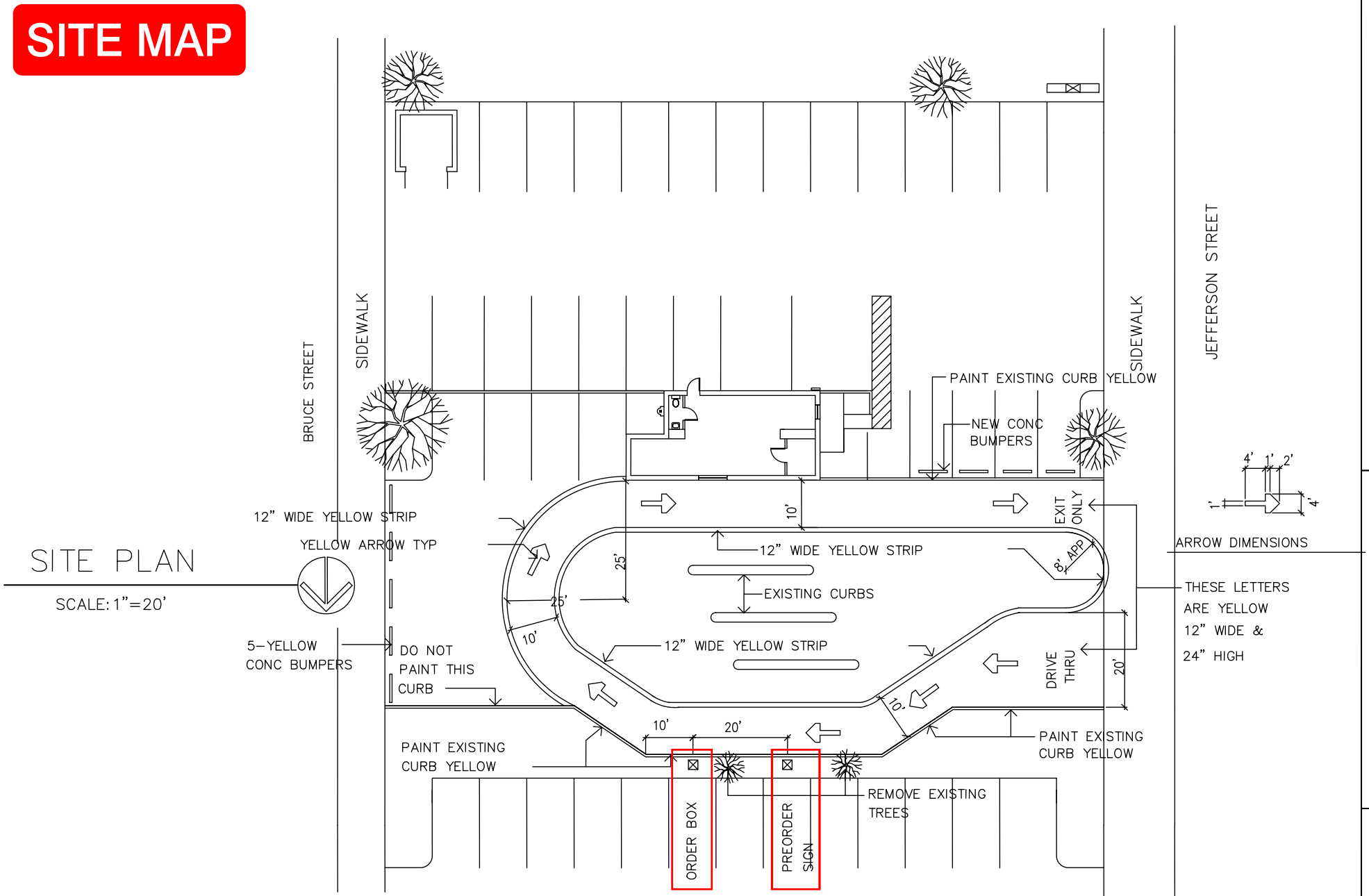

SITE PLAN

SCALE: 1"=20'

BRETT DUCH ARCHITECT
BRETT@BRETTDUCH.COM 393 7547

SALAD N DASH
21 E GARDEN STREET

C-2

SITE PHOTOGRAPHS



















ENGINEERING AND SPECIFICATIONS

ROBERT-JAMES & ASSOCIATES, Inc.
12255 West 187th Street
Mokena, Illinois 60448
(708) 479-8385

File : HowardCo348a.mcd

Site : Salad and Dash
10 South Jefferson Street
Pensacola, Florida 32502

Project : 10'-2 1/16" overall height single pole with a 4-1/2" tall x 5'-10" wide x 7'-2" long angled canopy on a caisson footing. Pole has a 4'-6 9/16" x 4'-11 3/8" menuboard mounted on the pole 2'-3" above grade along with microphone and speaker box.
Drawing No. 2312024 rev. A sheets 1 and 2 of 2.

Design wind load based on the 2020 Florida Building Code, 7th Edition (ASCE 7-16) using Exposure C and 155 mph wind speed.

Design Wind Speed : (mph.) $V := 155.0$ Based on Risk Category II

Velocity Pressure Coefficient at a Height of Less Than 15', Exposure C : $Kz := 0.85$ Based on Table 29.3-1

Topographic Factor : $Kzt := 1.00$ Based on Table 26.8-1

Wind Directionality Factor : $Kd := 0.85$ Based on Table 26.6-1

Velocity Pressure : (PSF) $qz := 0.00256 \cdot Kz \cdot Kzt \cdot Kd \cdot V^2$ $qz = 44.437$ Based on 29.3-1

Force Coefficient : $Cf := 1.80$ Based on Figure 29.4-1

Gust Effect Factor : $G := 0.85$ Based on 26.9.4 for Other Structures

ASD Conversion Factor : $LCF := 0.60$

Design Pressure : (PSF) $F := qz \cdot Cf \cdot G \cdot LCF$ $F = 40.793$ Use : $WL := 40.8$

Design Snow Load : (PSF) $SL := 0.0$ N/A

Reference : Manual of Steel Construction, AISC 13th Edition.

Tube : ASTM A-500 Gr. B Fy = 46.0 ksi. ; Fb = 30.36 ksi. ; Fv = 18.40 ksi.

Pipe : ASTM A-252 Gr. 3 Fy = 42.0 ksi. ; Fb = 27.72 ksi. ; Fv = 16.80 ksi.

Plate : ASTM A-36 Fy = 36.0 ksi. ; Fb = 27.00 ksi. ; Fv = 14.40 ksi.

Mounting Bolts : 18-8 Stainless Steel Fu = 60.0 ksi. ; Ft = 20.00 ksi. ; Fv = 10.00 ksi.

Anchor Bolts : ASTM F-1554 Gr. 36 Fu = 58.0 ksi. ; Ft = 19.14 ksi. ; Fv = 14.40 ksi.

Reference : 2020 Aluminum Design Manual, The Aluminum Association

Tube : 6061-T6 Temper and Alloy Fy = 27.0 ksi. ; Fb = 19.00 ksi. ; Fv = 12.00 ksi.

Reference : American Concrete Institute, Code 318.14

Rebar : ASTM A-615 Grade 60 Fy = 60.0 ksi.

Concrete : 3,000 psi. compressive strength at 28 days.

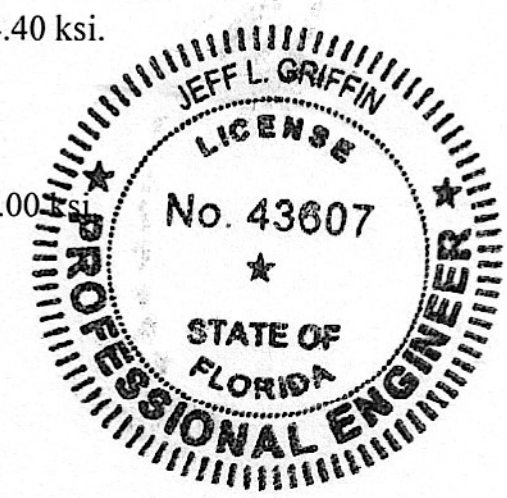

Design Loads at EL 9.26' : (Top of pole.)

Wind Load :

Shear : (lbs.) $ShrWL := (1.0 \cdot 7.12 \cdot WL)$ $ShrWL = 290.496$

Moment : (ft.lbs.) $MtWL := ShrWL \cdot \left(\frac{0.98}{2}\right)$ $MtWL = 142.343$

Offset Wind Load :

Shear : (lbs.) $ShrOSWL := (1.0 \cdot 5.31 \cdot WL)$ $ShrOSWL = 216.648$

Moment : (ft.lbs.) $MtOSWL := ShrOSWL \cdot \left(\left(\frac{5.31}{2}\right) + 0.93\right)$ $MtOSWL = 776.683$

Offset Dead Load :

Shear : (lbs.) $ShrOSDL := (5.83 \cdot 5.31 \cdot 8.5)$ $ShrOSDL = 263.137$

Moment : (ft.lbs.) $MtOSDL := ShrOSDL \cdot \left(\left(\frac{5.31}{2}\right) + 0.93\right)$ $MtOSDL = 943.346$

Offset Snow Load :

Shear : (lbs.) $ShrOSSL := (5.83 \cdot 5.31 \cdot SL)$ $ShrOSSL = 0$

Moment : (ft.lbs.) $MtOSSL := ShrOSSL \cdot \left(\left(\frac{5.31}{2}\right) + 0.93\right)$ $MtOSSL = 0$

Combined Shear :

Summation : (ft.lbs.) $ShrEL9_{26} := ShrOSWL + ShrOSDL + ShrOSSL$ $ShrEL9_{26} = 479.785$

Design of Aluminum Tube Frame of Canopy :

Section Modulus of Tube - X Axis : (in.3) 4" x 2" x 1/8" wall - $XAxisSM := 1.51$

Moment per Tube - X Axis : (ft.lbs.) $MtTube_{xaxis} := \frac{MtOSDL + MtOSSL}{4}$ $MtTube_{xaxis} = 235.837$

Bending Stress - X Axis : (psi.) $f_{bxaxis} := \frac{MtTube_{xaxis} \cdot 12}{XAxisSM}$ $f_{bxaxis} = 1874.198$

Section Modulus of Tube - Y Axis : (in.3) 4" x 2" x 1/8" wall - $YAxisSM := 1.00$

Moment per Tube - Y Axis : (ft.lbs.) $MtTube_{yaxis} := \frac{MtWL + MtOSWL}{4}$ $MtTube_{yaxis} = 229.757$

Bending Stress - Y Axis : (psi.) $f_{byaxis} := \frac{MtTube_{yaxis} \cdot 12}{YAxisSM}$ $f_{byaxis} = 2757.078$

Area of Tube : (in.2) 4" x 2" x 1/8" wall - $TubeArea := 1.45$

Shear per Tube : (ft.lbs.) $ShrTube := \frac{ShrEL9_{26}}{4}$ $ShrTube = 119.946$

Bending Stress : (psi.) $f_v := \frac{ShrTube}{TubeArea}$ $f_v = 82.722$

Unity Check - Canopy Frame :

$UCCnpyFrm := \frac{f_{bxaxis}}{14670} + \frac{f_{byaxis}}{14670} + \frac{f_v}{12000}$ $UCCnpyFrm = 0.323$ < 1.00 OK

Design of Canopy Mounting Bolts :

Mounting Bolt Diameter : (in.) $MntBltDia := 0.50$

Stress Area : (in.2)
(Based on nominal diameter per AISC 4-3) $MntBltArea := \frac{\pi \cdot MntBltDia^2}{4}$ $MntBltArea = 0.196$

Allowable Tension : (lbs.) $AllwTen := 44000 \cdot MntBltArea$ $AllwTen = 8639$

Allowable Shear : (lbs.) $AllwShr := 21000 \cdot MntBltArea$ $AllwShr = 4123$

Number of Mounting Bolts in Tension Side to Side : $NoTenSS := 1$

Front to Back Bolt Bolt Centerlines : (in.) $FBLvrArm := 11.75$

Tension Load per Mounting Bolt : (lbs.) $TenBlt := \frac{(MtOSDL + MtOSSL) \cdot 12}{NoTenSS \cdot FBLvrArm}$ $TenBlt = 963.42$

Number of Mounting Bolts in Shear : $NoShr := 4$

Number of Mounting Bolt Couples : $NoCpls := 2$

Side to Side Bolt Centerlines : (in.) $SSLvrArm := 11.75$

Diagonal Bolt Centerlines : (in.) $Diagonal := \sqrt{(SSLvrArm^2 + FBLvrArm^2)}$

$Diagonal = 16.617$

Shear per Mounting Bolt : (lbs.) $ShrBlt := \frac{ShrEL9_{26}}{NoShr} + \frac{(MtWL + MtOSWL) \cdot 12}{NoCpls \cdot Diagonal}$ $ShrBlt = 451.784$

Unity Check :
Mounting Bolts $UCMntBlts := \frac{TenBlt}{AllwTen} + \frac{ShrBlt}{AllwShr}$ $UCMntBlts = 0.221$ < 1.00 OK

Use : 1/2" diameter ASTM A-325 bolts and equivalent nuts and washers.

Design of Aluminum Canopy Bent Steel Mounting Plate at EL. 9.26' :

Plate Thickness : (in.) $PltThk := 0.250$ Plate Width : (in.) $PltWdth := 14.875$

Transfer Distance : (in.) $PLS := \frac{PltWdth - (SSLvrArm + (2 \cdot 1.0))}{2}$ $PLS = 0.563$

Minimum Thickness Required : (in.) $ReqdThk := \sqrt{\left(\frac{TenBlt \cdot NoTenSS \cdot PLS \cdot 6}{(PltWdth \cdot 27000)}\right)}$ $ReqdThk = 0.09$

Unity Check : $UCCnpyPlt := \frac{ReqdThk}{PltThk}$ $UCCnpyPlt = 0.36$ < 1.00 OK
Bent Steel Mounting Plate

Use : 1/4" thick x 4-13/16" x 14-15/16" x 4-13/16" bent channel x 15" long with four (4) 5/8" diameter holes on a 11-3/4" bolt circle.

Design of Insert Pipe Top Plate at EL. 9.26' :

Plate Thickness : (in.) $PltThk := 0.75$ Plate Width : (in.) $PltWdth := 14.94$

Transfer Distance : (in.) $PLS := 4.0$

Minimum Thickness Required : (in.) $ReqdThk := \sqrt{\left(\frac{TenBlt \cdot NoTenSS \cdot PLS \cdot 6}{(PltWdth \cdot 27000)}\right)}$ $ReqdThk = 0.239$

Unity Check : $UCInsrtTopPlt := \frac{ReqdThk}{PltThk}$ $UCInsrtTopPlt = 0.319$ < 1.00 OK
Insert Pipe Top Plate

Use : 3/4" thick x 14 x 14" plate with four (4) 5/8" diameter holes on a 11-3/4 bolt circle. plate has 4-7/8" 45 degree chamfer corners.

Design of Insert Pipe at EL. 9.26' :

Pipe : 4-1/2" Dia. x 0.188" wall - Dia : (in.) $Dia := 4.5$

Radius : (in.) $r := \frac{Dia}{2}$ $r = 2.25$

Area : (in.2) $PipeArea := 2.55$

Section Modulus : (in.3) $PipeSM := 2.64$

Torsional Stiffness Constant : (in.4) $J := 11.86$

Bending Stress : (psi.) $f_b := \frac{(MtOSDL + MtOSSL) \cdot 12}{PipeSM}$ $f_b = 4287.938$

Shear Stress : (psi.) $fv := \frac{ShrEL9_{26}}{PipeArea}$ $fv = 188.151$

Torsional Stress : (psi.) $ft := \frac{(MtWL + MtOSWL \cdot 12) \cdot r}{J}$ $ft = 1795.17$

Combined Shear Stress : (psi.) $fv_{Comb} := \sqrt{((fv + ft)^2 + ft^2)}$ $fv_{Comb} = 2675.107$

Unity Check : $UCInsertPipe := \frac{f_b}{27720} + \frac{fv_{Comb}}{16800}$ $UCInsertPipe = 0.314$ < 1.00 OK
Insert Pipe

Design Loads at Grade : (Top of the footing.)

Wind Load :

Canopy : $Cnpy := (1.0 \cdot 5.83 \cdot WL) \cdot \left(\left(\frac{1.0}{2}\right) + 9.26\right)$ $Cnpy = 2321.553$ ft.lbs.

Upper Exposed Pole : $UprPole := \left(2.46 \cdot \left(\frac{5.0}{12}\right) \cdot WL\right) \cdot \left(\left(\frac{2.46}{2}\right) + 6.80\right)$ $UprPole = 335.815$ ft.lbs.

Menuboard : (Including audio box.) $Mnbd := (4.55 \cdot 4.95 \cdot WL) \cdot \left(\left(\frac{4.55}{2}\right) + 2.25\right)$ $Mnbd = 4158.104$ ft.lbs.

Lower Exposed Pole : $LwrPole := \left(2.25 \cdot \left(\frac{5.0}{12}\right) \cdot WL\right) \cdot \left(\frac{2.25}{2}\right)$ $LwrPole = 43.031$ ft.lbs.

Moment : (ft.lbs.) $\boxed{MtWL} := Cnpy + UprPole + Mnbd + LwrPole$ $MtWL = 6858.502$

Shear : (lbs.) $\boxed{ShrWL} := (1.0 \cdot 5.83 \cdot WL) + (4.55 \cdot 4.95 \cdot WL) + \left(4.71 \cdot \left(\frac{5.0}{12}\right) \cdot WL\right)$ $ShrWL = 1236.852$

Offset Wind Load :

Shear : (lbs.) $\boxed{ShrOSWL} := (4.0 \cdot 1.5 \cdot WL)$ $ShrOSWL = 244.8$

Moment : (ft.lbs.) $\boxed{MtOSWL} := ShrOSWL \cdot \left(\left(\frac{1.5}{2}\right) + 2.75\right)$ $MtOSWL = 856.8$

Offset Dead Load :

Shear : (lbs.) $\boxed{ShrOSDL} := (4.0 \cdot 1.5 \cdot 8.5)$ $ShrOSDL = 51$

Moment : (ft.lbs.) $\boxed{MtOSDL} := ShrOSDL \cdot \left(\left(\frac{1.5}{2}\right) + 2.75\right)$ $MtOSDL = 178.5$

Offset Snow Load :

Shear : (lbs.) $\boxed{ShrOSSL} := (1.5 \cdot 0.5 \cdot SL)$ $ShrOSSL = 0$

Moment : (ft.lbs.) $\boxed{MtOSSL} := ShrOSSL \cdot \left(\left(\frac{1.5}{2}\right) + 2.75\right)$ $MtOSSL = 0$

Combined Moment :

Summation : (ft.lbs.) $MtGrd := MtWL + MtOSDL + MtOSSL$ $MtGrd = 7037.002$

Combined Shear :

Summation : (lbs.) $ShrGrd := ShrWL + ShrOSDL + ShrOSSL$ $ShrGrd = 1287.852$

Design of Pole Structure at EL. 0.71' :

Tube : HSS 5" x 5" x 3/16" wall Area : (in.2) $\boxed{TubeArea} := 3.28$

Section Modulus : (in.3) $TubeSM := 5.03$

Torsional Stiffness Constant : (in.4) $C := 8.08$

Bending Stress : (psi.) $f_b := \frac{MtGrd \cdot 12}{TubeSM}$ $f_b = 16788.077$

Shear Stress : (psi.) $fv := \frac{ShrGrd}{TubeArea}$ $fv = 392.638$

Torsional Stress : (psi.) $ft := \frac{(MtOSWL \cdot 12)}{C}$ $ft = 1272.475$

Combined Shear Stress : (psi.) $fv_{Comb} := \sqrt{((fv + ft)^2 + ft^2)}$ $fv_{Comb} = 2095.661$

Unity Check - Pole : $UCPole := \frac{f_b}{30360} + \frac{fv_{Comb}}{18400}$ $UCPole = 0.667$ < 1.00 OK

Design of Anchor Bolts at Grade :

Anchor Bolt Diameter : (in.) $AncBltDia := 0.75$

Stress Area : (in.2) $AncBltArea := \frac{\pi \cdot AncBltDia^2}{4}$ $AncBltArea = 0.442$
(Based on nominal diameter per AISC 4-3)

Allowable Tension : (lbs.) $AllwTen := 19140 \cdot AncBltArea$ $AllwTen = 8456$

Allowable Shear : (lbs.) $AllwShr := 14400 \cdot AncBltArea$ $AllwShr = 6362$

Number of Anchor Bolts in Tension : $NoTen := 2$

Front to Back Distance Between Anchor Bolts : (in.) $LvrArm := 8.0$

Side to Side Distance Between Anchor Bolts : (in.) $BltSprd := 8.0$

Tension Load per Anchor Bolt : (lbs.) $TenAncBlt := \frac{MtGrd \cdot 12}{NoTen \cdot LvrArm} + \frac{(MtOSDL + MtOSSL) \cdot 12}{NoTen \cdot BltSprd}$

$TenAncBlt = 5411.63$

Number of Anchor Bolts in Shear : $NoShr := 4$

Number of Bolt Couples : $NoBltCpls := 2$

Diagonal Distance Between Anchor Bolts : (in.) $BltDiagnl := \sqrt{(LvrArm^2 + BltSprd^2)}$

$BltDiagnl = 11.314$

Shear Load per Anchor Bolt : (lbs.) $ShrAncBlt := \frac{ShrGrd}{NoShr} + \frac{(MtOSWL \cdot 12)}{NoBltCpls \cdot BltDiagnl}$

$ShrAncBlt = 776.35$

Unity Check : Anchor Bolts $UCAncBlts := \frac{TenAncBlt}{AllwTen} + \frac{ShrAncBlt}{AllwShr}$ $UCAncBlts = 0.762$ < 1.00 OK

Allowable Bond Stress : (lbs./ in.2) $U := \left(\frac{1}{2}\right) \cdot \left(\frac{4.8 \cdot \sqrt{3000}}{AncBltDia}\right)$ $U = 175.271$

Development Length : (in.) $Ld := \frac{TenAncBlt}{U \cdot \pi \cdot AncBltDia}$ $Ld = 13.104$

Embedment Length : (in.) $AncBltEmb := 30 - 4.0$ $AncBltEmb = 26$
(30" overall length minus 4" of thread projection.)

Unity Check : Anchor Bolt Embedment $UCABEmb := \frac{Ld}{AncBltEmb}$ $UCABEmb = 0.504$ < 1.00 OK

Use : Four (4) 3/4" Dia. x 30" anchor bolts with 4" of top thread and 2" of bottom thread.

Design of Base Plate at Grade :

Plate Thickness : (in.) $PltThk := 0.75$ Plate Width : (in.) $PltWdth := 14.25$

Transfer Distance : (in.) $PLS := \frac{BltDiagnl - \sqrt{(5.0^2 + 5.0^2)}}{2}$ $PLS = 2.121$

Minimum Thickness Required : (in.) $ReqdThk := \sqrt{\left(\frac{TenAncBlt \cdot NoTen \cdot PLS \cdot 6}{(PltWdth \cdot 27000)}\right)}$ $ReqdThk = 0.598$

Unity Check - Base Plate : $UCBasePlt := \frac{ReqdThk}{PltThk}$ $UCBasePlt = 0.798$ < 1.00 OK

Use : 3/4" thick x 14-1/4" x 14-1/4" base plate with four (4) 7/8" x 3-3/4" radial slots on a 11-5/16" bolt circle.

Design of Caisson Footing :

Overturning Moment : (ft.lbs.)	$Ma := MtGrd$	$Ma = 7037.002$
Shear : (lbs.)	$Va := ShrGrd$	$Va = 1287.852$
Applied Lateral Force : (lbs.)	$P := Va$	$P = 1287.852$
Allowable Lateral Soil Pressure : (lbs./ft.2 per ft.)		$LP := 150$
Diameter of Round Footing : (ft.)		$b1 := 2.0$
Distance in Feet From Ground Surface to Point of Application of "P"	$h := \frac{Ma}{Va}$	$h = 5.464$
Depth of Footing Below Grade : (ft.)		$d1 := 5.75$
Allowable Lateral Soil Bearing Pressure Pursuant to the 2018 International Building Code Section 1807.3.2.1 and Table 1806.2 with 100% increase for allowable 1/2" deflection at grade.	$S1 := d1 \cdot \frac{(LP \cdot 1.33)}{3}$	$S1 = 382.375$

$A := 2.34 \cdot \frac{P}{(S1 \cdot 2) \cdot b1}$ $A = 1.97$

$d2 := \left(\frac{A}{2}\right) \cdot \left(1 + \left(\sqrt{1 + 4.36 \cdot \frac{h}{A}}\right)\right)$ $d2 = 4.55$ ≤ $d1 = 5.75$ OK

Check Tensile Stress in Footing :

Overturning Moment About Heel Point : (ft.lbs.) $Mh := Ma + (Va \cdot d1)$ $Mh = 14442.151$
Treat as a cantilever at bottom.

Compressive Strength of Concrete : (psi.) $fc := 3000$

Yield Strength of Rebar : (psi.) $fy := 60000$

Section Modulus of Footing : (in.3) $Sw := \frac{\pi \cdot (b1 \cdot 12)^3}{32}$ $Sw = 1357.168$

Tensile Stress in Concrete : (psi.) $ft := \left(\frac{(Mh \cdot 12)}{Sw}\right)$ $ft = 127.697$

Allowable Concrete Stress : (psi.) $\phi Ft := 0.65 \cdot (5 \cdot \sqrt{fc})$ $\phi Ft = 178.01 > ft = 127.697$
REBAR NOT REQUIRED FOR STRESS

Design of Temperature and Shrinkage Steel in Footing :

Moment for USD Design : $Mu := 1.7 \cdot Mh$ $Mu = 24551.657$

$d := ((b1 \cdot 12) \cdot .80) - 3$ $d = 16.2$

To Plot for " ju " : $coeff := \frac{Mu \cdot 12}{fc \cdot b1 \cdot 12 \cdot d^2}$ $coeff = 0.016$ $ju := 0.73$

Required Area : (in.2) $As := \frac{Mu \cdot 12}{ju \cdot fy \cdot d \cdot 0.90}$ $As = 0.461$

Rebar Size : $Number := 5$

Rebar Area : (in.2) $Area := \frac{\pi \cdot \left(\frac{Number}{8}\right)^2}{4}$ $Area = 0.31$

Number Required : $\left(\frac{As}{Area}\right) \cdot 2 = 3.008$ Use four (4) #5 Rebar x 5'-3" LG. equally spaced on a 18" circle with eight (8) #3 Rebar ties. The top three (3) ties in the first 5", two (2) on 9" centers and remaining three (3) on 13" centers.

Quantity of Concrete : (yds.3) $CY := \frac{\pi \cdot b1^2 \cdot d1}{4 \cdot 27}$ $CY = 0.669$

ROBERT-JAMES & ASSOCIATES, Inc.
12255 West 187th Street
Mokena, Illinois 60448
(708) 479-8385

File : HowardCo348b.mcd

Site : Salad and Dash
10 South Jefferson Street
Pensacola, Florida 32502

Project : 4'-3 7/16" x 2'-5 7/8" presell board on a HSS 4" x 4" crossmember set in formed base at 5'-11 7/16" overall height on a caisson footing.
Drawing No. 2312025 rev. A

Design wind load based on 2020 Florida Building Code, 7th Edition (ASCE 7-16) using Exposure C and 155 mph wind speed.

Design Wind Speed : (mph.) $V := 155.0$ Based on Risk Category II

Velocity Pressure Coefficient at a Height of Less Than 15', Exposure C : $Kz := 0.85$ Based on Table 29.3-1

Topographic Factor : $Kzt := 1.00$ Based on Table 26.8-1

Wind Directionality Factor : $Kd := 0.85$ Based on Table 26.6-1

Velocity Pressure : (PSF) $qz := 0.00256 \cdot Kz \cdot Kzt \cdot Kd \cdot V^2$ $qz = 44.437$ Based on 29.3-1

Force Coefficient : $Cf := 1.80$ Based on Figure 29.4-1

Gust Effect Factor : $G := 0.85$ Based on 26.9.4 for Other Structures

ASD Conversion Factor : $LCF := 0.60$

Design Pressure : (PSF) $F := qz \cdot Cf \cdot G \cdot LCF$ $F = 40.793$ Use : $WL := 40.8$

Reference : Manual of Steel Construction, AISC 13th Edition.

Tube : ASTM A-500 Gr. B Fy = 46.0 ksi. ; Fb = 30.36 ksi. ; Fv = 18.40 ksi.

Plate : ASTM A-36 Fy = 36.0 ksi. ; Fb = 27.00 ksi. ; Fv = 14.40 ksi.

Sheet Metal : ASTM A-36 Fy = 36.0 ksi. ; Fb = 23.76 ksi. ; Fv = 14.40 ksi.

Anchor Bolts : ASTM F-1554 Gr. 36 Fu = 58.0 ksi. ; Ft = 19.14 ksi. ; Fv = 14.40 ksi.

Reference : American Concrete Institute, Code 318.14

Rebar : ASTM A-615 Grade 60 Fy = 60.0 ksi.

Concrete : 3,000 psi. compressive strength at 28 days.

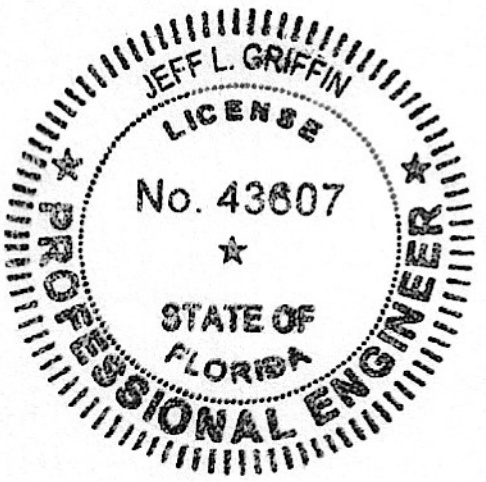

Design Loads at EL 1.67' : (Menuboard to crossmember tube.)

Shear : (lbs.) $ShrEL1_{67} := (4.28 \cdot 2.49 \cdot WL)$ $ShrEL1_{67} = 434.814$

Moment : (ft.lbs.) $MtEL1_{67} := ShrEL1_{67} \cdot \left(\frac{4.28}{2}\right)$ $MtEL1_{67} = 930.501$

Axial : (lbs.) $AxlEL1_{67} := (4.28 \cdot 2.49 \cdot 6.5)$ $AxlEL1_{67} = 69.272$

Design of Crossmember Tube at EL. 1.67' :

Tube : HSS 4" x 4" x 3/16" wall - Area : (in.2) $TubeArea := 2.58$

Section Modulus : (in.3) $TubeSM := 3.10$

Torsional Stiffness Constant : (in.4) $TubeC := 5.07$

Tube Weight : (lbs./ft.) $TubeWt := 9.40$

Length of Tube : (ft.) $L := 7.28$

Wind Load from the Crossbar : (lbs./ft.) $Wld := \left(\frac{4}{12}\right) \cdot WL$ $Wld = 13.6$

Shear Loads : (lbs.)

$V_1 := \frac{TubeWt \cdot L}{2} + \frac{AxlEL1_{67}}{2}$ $V_1 = 68.852$ $V_2 := \frac{Wld \cdot L}{2} + \frac{ShrEL1_{67}}{2}$ $V_2 = 266.911$

Shear Stresses : (lbs./in.2)

$fvx := \frac{V_1}{TubeArea}$ $fvx = 26.687$ $fvy := \frac{V_2}{TubeArea}$ $fvy = 103.454$

$fvt := \frac{(MtEL1_{67} \cdot 12)}{TubeC}$ $fvt = 2202.37$

Combined : $fv_{Comb} := \sqrt{(fvx + fvt)^2 + (fvy + fvt)^2}$ $fv_{Comb} = 3207.105$

Bending Loads : (ft.lbs.)

$M_1 := \frac{TubeWt \cdot L^2}{12} + \frac{AxlEL1_{67} \cdot L}{8}$ $M_1 = 104.553$ $M_2 := \frac{Wld \cdot L^2}{12} + \frac{ShrEL1_{67} \cdot L}{8}$ $M_2 = 455.745$

Bending Stresses : (lbs./in.2)

$fbx := \frac{M_1 \cdot 12}{TubeSM}$ $fbx = 404.72$ $fby := \frac{M_2 \cdot 12}{TubeSM}$ $fby = 1764.176$

Combined : $fb_{Comb} := fbx + fby$ $fb_{Comb} = 2168.896$

Unity Check : Crossmember $UC_{Crsbr} := \frac{fv_{Comb}}{18400} + \frac{fb_{Comb}}{30360}$ $UC_{Crsbr} = 0.246$ < 1.00 OK

Design Loads at Grade :

Menuboard : (Including crossbar.) $BrdCrsbr := (4.62 \cdot 2.49 \cdot WL) \cdot \left(\left(\frac{4.62}{2}\right) + 1.33\right)$ $BrdCrsbr = 1708.452$ ft.lbs.

Fabricated Base : $Base := (1.33 \cdot 1.54 \cdot WL) \cdot \left(\frac{1.33}{2}\right)$ $Base = 55.572$ ft.lbs.

Moment : (ft.lbs.) $MtGrd := BrdCrsbr + Base$ $MtGrd = 1764.024$

Shear : (lbs.) $ShrGrd := (4.62 \cdot 2.49 \cdot WL) + (1.33 \cdot 1.54 \cdot WL)$ $ShrGrd = 552.922$

Design of Fabricated Base at Grade :

Base : 18-1/2" x 11-3/4" x 0.1345" (10 GA.)

Section Modulus of Base : (in.3) $BaseSM := 30.8$ (Weak axis)

Bending Stress : (psi.) $f_b := \frac{MtGrd \cdot 12}{BaseSM}$ $f_b = 687.282$

Area of Base : (in.2) $BaseArea := 7.61$

Shear Stress : (psi.) $f_v := \frac{ShrGrd}{BaseArea}$ $f_v = 72.657$

Unity Check : Fabricated Base $UCBase := \frac{f_b}{23760} + \frac{f_v}{14400}$ $UCBase = 0.034$ < 1.00 OK

Design of Anchor Bolts at Grade :

Anchor Bolt Diameter : (in.) $AncBltDia := 0.75$

Stress Area : (in.2) (Based on nominal diameter per AISC 4-3) $AncBltArea := \frac{\pi \cdot AncBltDia^2}{4}$ $AncBltArea = 0.442$

Allowable Tension : (lbs.) $AllwTen := 24750 \cdot AncBltArea$ $AllwTen = 10934$

Allowable Shear : (lbs.) $AllwShr := 18620 \cdot AncBltArea$ $AllwShr = 8226$

Number of Anchor Bolts in Tension : $NoTen := 2$

Front to Back Distance Between Anchor Bolts : (in.) $LvrArm := 10.0$ (Based on 14-1/8" bolt circle.)

Tension Load per Anchor Bolt : (lbs.) $TenAncBlt := \frac{MtGrd \cdot 12}{NoTen \cdot LvrArm}$ $TenAncBlt = 1058.41$

Number of Anchor Bolts in Shear : $NoShr := 4$

Shear Load per Anchor Bolt : (lbs.) $ShrAncBlt := \frac{ShrGrd}{NoShr}$ $ShrAncBlt = 138.23$

Unity Check : Anchor Bolts $UCAncBlts := \frac{TenAncBlt}{AllwTen} + \frac{ShrAncBlt}{AllwShr}$ $UCAncBlts = 0.114$ < 1.00 OK

Allowable Bond Stress : (lbs./ in.2) $U := \left(\frac{1}{2}\right) \cdot \left(\frac{4.8 \cdot \sqrt{4500}}{AncBltDia}\right)$ $U = 214.663$

Development Length : (in.) $Ld := \frac{TenAncBlt}{U \cdot \pi \cdot AncBltDia}$ $Ld = 2.093$

Embedment Length : (in.) $AncBltEmb := 30 - 4$ $AncBltEmb = 26$
(30" overall length minus 4" of thread projection.)

Unity Check : Anchor Bolt Embedment $UCABEmb := \frac{Ld}{AncBltEmb}$ $UCABEmb = 0.08$ < 1.00 OK

Use : Four (4) 3/4" Dia. x 30" anchor bolts with 4" of top thread and 2" of bottom thread.

Design of Base Plate at Grade :

Plate Thickness : (in.) $PltThk := 1.00$ Plate Width : (in.) $PltWdth := 18.50$

Side to Side Distance Between Anchor Bolts : (in.) $BltSprd := 8.0$

Transfer Distance : (in.) $PLS := \frac{PltWdth - BltSprd}{2}$ $PLS = 5.25$

Minimum Thickness Required : (in.) $ReqdThk := \sqrt{\left(\frac{TenAncBlt \cdot NoTen \cdot PLS \cdot 6}{(PltWdth \cdot 27000)}\right)}$ $ReqdThk = 0.365$

Unity Check - Base Plate : $UCBasePlt := \frac{ReqdThk}{PltThk}$ $UCBasePlt = 0.365$ < 1.00 OK

Use : 1" thick x 18-1/2" x 12-1/4" base plate with four (4) 7/8" x 4" radial slots on a 11-5/16" bolt circle.

Design of Caisson Footing :

Overturning Moment : (ft.lbs.) $Ma := MtGrd$ $Ma = 1764.024$

Shear : (lbs.) $Va := ShrGrd$ $Va = 552.922$

Applied Lateral Force : (lbs.) $P := Va$ $P = 552.922$

Allowable Lateral Soil Pressure : (lbs./ft.2 per ft.) $LP := 150$

Diameter of Round Footing : (ft.) $b1 := 2.0$

Distance in Feet From Ground Surface to Point of Application of "P" $h := \frac{Ma}{Va}$ $h = 3.19$

Depth of Footing Below Grade : (ft.) $d1 := 4.75$

Allowable Lateral Soil Bearing Pressure Pursuant to the 2018 International Building Code Section 1807.3.2.1 and Table 1806.2. $S1 := d1 \cdot \frac{(LP \cdot 1.33)}{3}$ $S1 = 315.875$

$A := 2.34 \cdot \frac{P}{S1 \cdot b1}$ $A = 2.048$

$d2 := \left(\frac{A}{2}\right) \cdot \left(1 + \left(\sqrt{1 + 4.36 \cdot \frac{h}{A}}\right)\right)$ $d2 = 3.882$ ≤ $d1 = 4.75$ OK

Check Tensile Stress in Footing :

Overturning Moment About Heel Point : (ft.lbs.) $Mh := Ma + (Va \cdot d1)$ $Mh = 4390.402$
Treat as a cantilever at bottom.

Compressive Strength of Concrete : (psi.) $fc := 3000$

Yield Strength of Rebar : (psi.) $fy := 60000$

Section Modulus of Footing : (in.3) $Sw := \frac{\pi \cdot (b1 \cdot 12)^3}{32}$ $Sw = 1357.168$

Tensile Stress in Concrete : (psi.) $ft := \left(\frac{(Mh \cdot 12)}{Sw}\right)$ $ft = 38.82$

Allowable Concrete Stress : (psi.) $\phi Ft := 0.65 \cdot (5 \cdot \sqrt{fc})$ $\phi Ft = 178.01$ > $ft = 38.82$

REBAR NOT REQUIRED FOR STRESS

Design of Temperature and Shrinkage Steel in Caisson :

Moment for USD Design : $Mu := 1.7 \cdot Mh$ $Mu = 7463.683$

$d := ((b1 \cdot 12) \cdot .80) - 3$ $d = 16.2$

To Plot for " ju " : $coeff := \frac{Mu \cdot 12}{fc \cdot b1 \cdot 12 \cdot d^2}$ $coeff = 0.005$ $ju := 0.62$

Required Area : (in.2) $As := \frac{Mu \cdot 12}{ju \cdot fy \cdot d \cdot 0.90}$ $As = 0.165$

Rebar Size : $Number := 4$

Rebar Area : (in.2) $Area := \frac{\pi \cdot \left(\frac{Number}{8}\right)^2}{4}$ $Area = 0.2$

Number Required : $\left(\frac{As}{Area}\right) \cdot 2 = 1.682$

Use four (4) #4 Rebar x 4'-3" LG. equally spaced on a 18" circle with eight (8) #3 Rebar ties. The top three (3) ties in the first 5", three (3) on 6" centers and the remaining two (2) on 13-1/2" centers.

Quantity of Concrete : (yds.3) $CY := \left(\frac{\pi \cdot b1^2 \cdot d1}{4 \cdot 27}\right)$ $CY = 0.553$

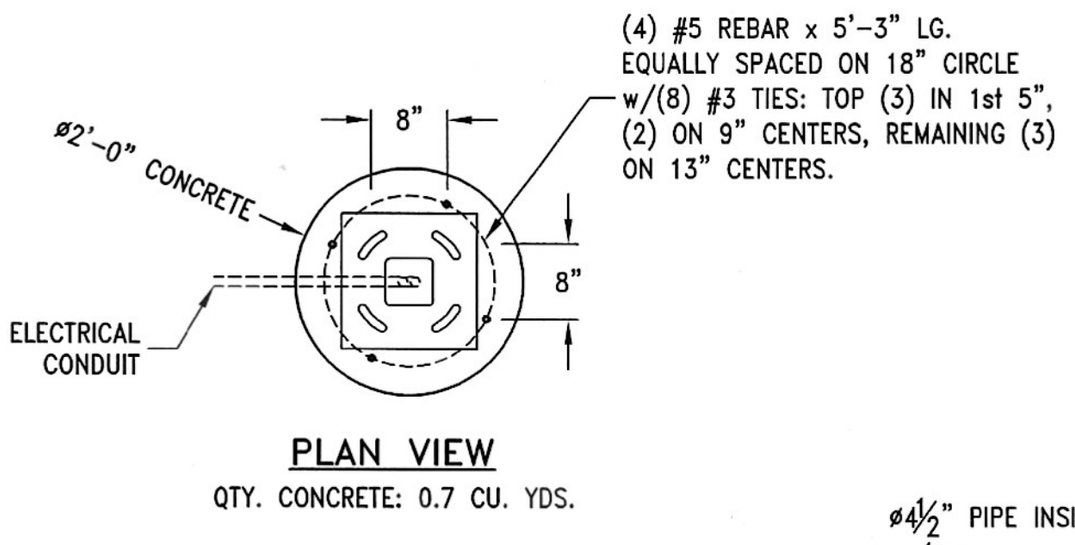

PLAN VIEW

QTY. CONCRETE: 0.7 CU. YDS.

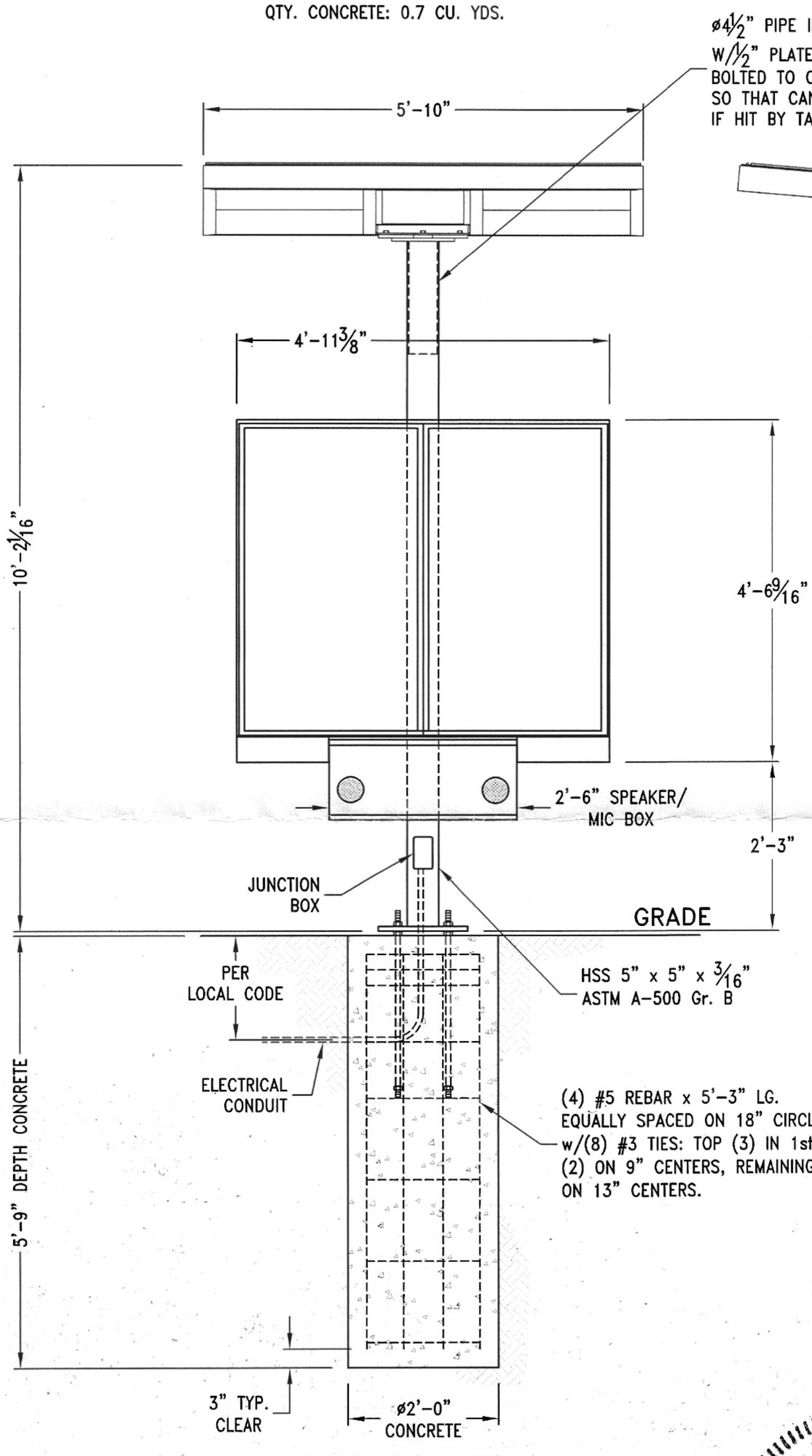

ELEVATION VIEW

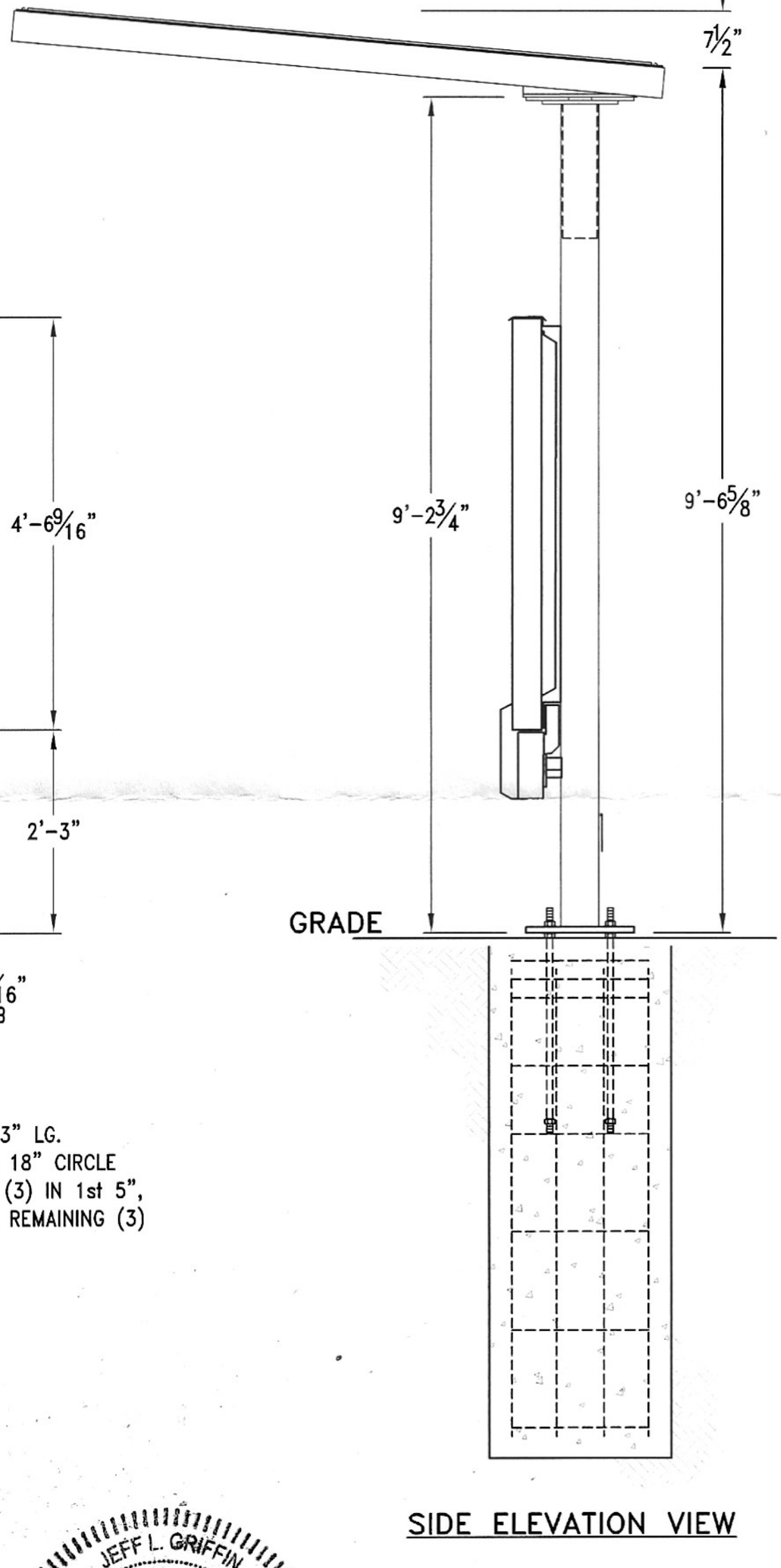

SIDE ELEVATION VIEW

FOUNDATION DESIGN & ENGINEERING NOTES:

1. Concrete shall have a minimum compressive strength of 3000 PSI at 28 days.
2. Reinforcing steel shall be ASTM A-615 Gr. 60.
3. Caisson footing designed using a soil bearing force of 150 PSF per foot Lateral. If this soil condition does not exist, it is the Erector's responsibility to have a new base designed for the existing soil conditions by a Licensed Engineer.
4. Anchor bolts shall be ASTM F-1554 Gr. 55 steel.
5. All electrical work to be done according to the NEC and Local Code.

DESIGN WIND LOAD:

Based on the 2020 Florida Building Code, 7th Edition (ASCE 7-16) using Risk Category II, Exposure C and 155 mph wind speed.

SEE DETAIL VIEWS - SHEET 2

JEFF L. GRIFFIN
LICENSE
No. 43607
STATE OF FLORIDA
PROFESSIONAL ENGINEER

SITE:
Salad and Dash
10 South Jefferson Street
Pensacola, Florida 32502

REV	DATE	DESCRIPTION	APPROVED
A	04 Dec 23	RELEASED FOR PERMITTING	J. HOGAN

Robert-James & Associates, Inc.
12255 West 187th Street, Mokena Illinois 60448-9737
phone: 708-479-8385 fax: 708-479-8395 email: rja37@comcast.net

TITLE: 10'-2 1/8" OAH SINGLE POLE DRIVE THRU CANOPY AND ORDER STATION

DRAWN BY	DATE	SCALE	DRAWING NUMBER	SHEET	REV.
A. KLOTZKE	04 Dec 23	NONE	2312024	1 OF 2	A
CHECKED BY J. HOGAN	DATE 04 Dec 23				

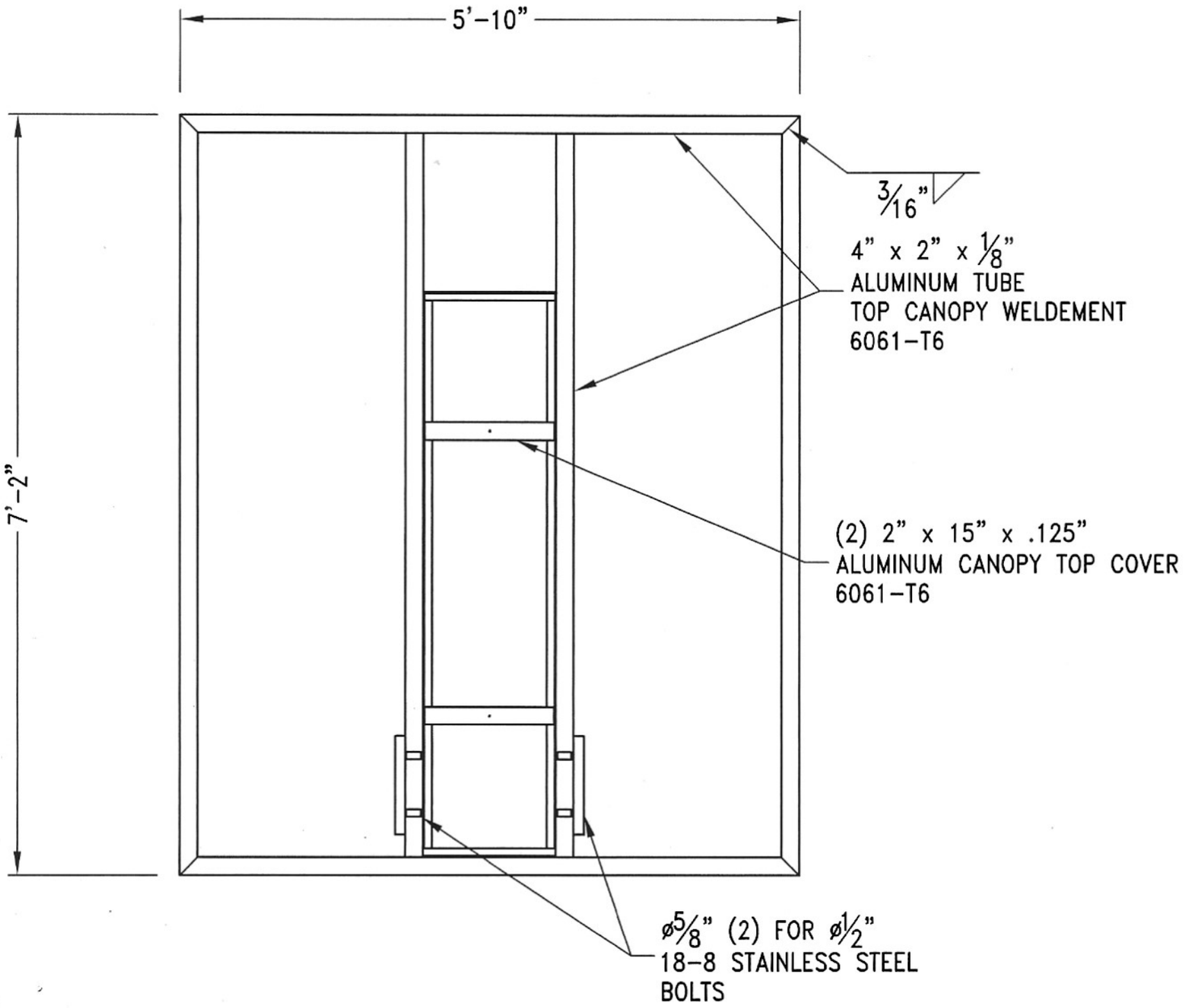

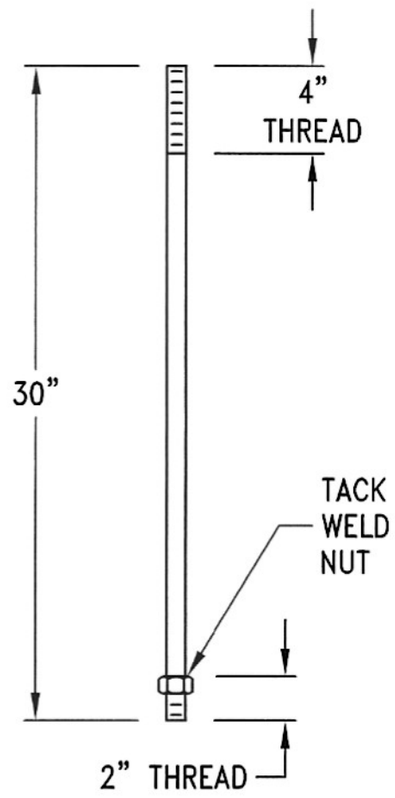

ANCHOR BOLT DETAIL

ø3/4" ASTM F-1554 Gr. 55 STEEL

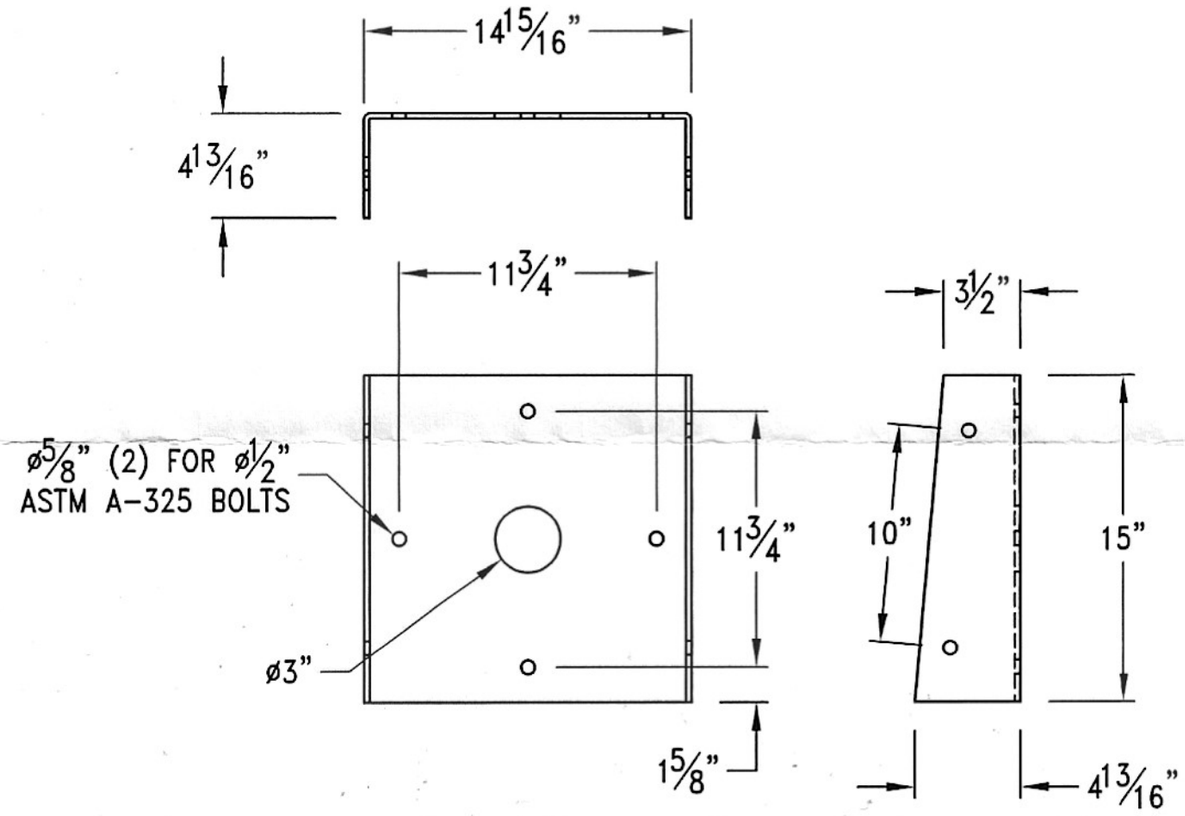

CANOPY TOP PIPE DETAIL

1/4" ASTM A-36 STEEL

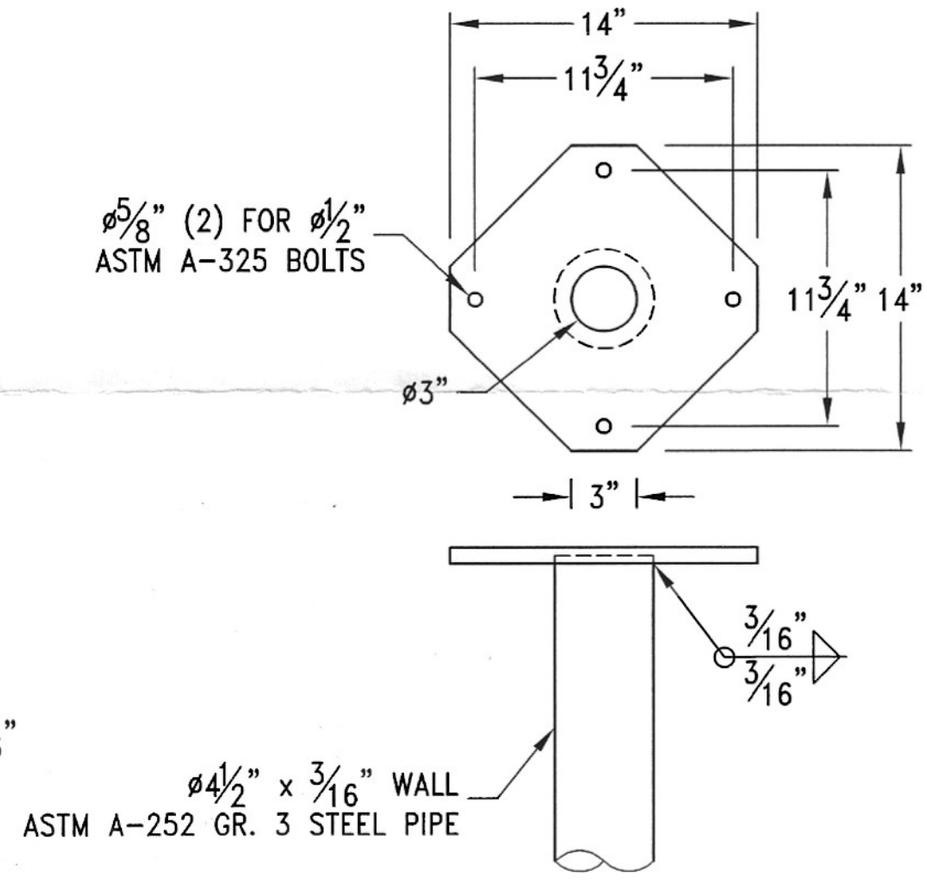

HELIX PIPE TOP PIPE DETAIL

3/4" ASTM A-36 STEEL

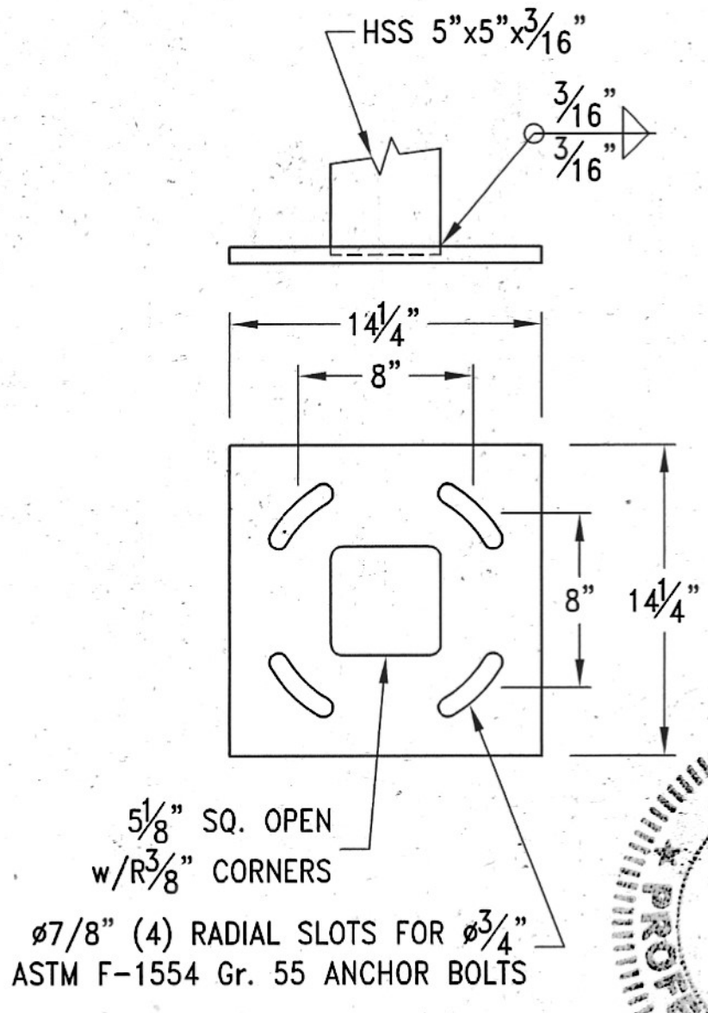

BASE PLATE DETAIL

3/4" ASTM A-36 STEEL

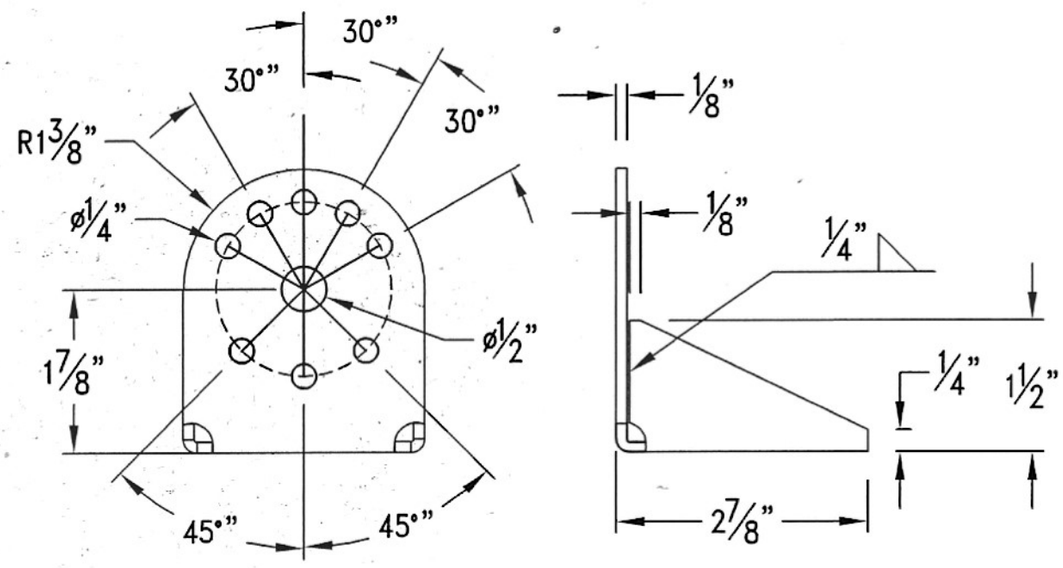

WING BRACKET

1/8" ALUMINUM 6061-T6

JEFF L. GRIFFIN
LICENSE
No. 43607
STATE OF
FLORIDA
PROFESSIONAL ENGINEER

Robert-James & Associates, Inc.
12255 West 187th Street, Mokena Illinois 60448-9737
phone: 708-479-8385 fax: 708-479-8395 email: rja37@comcast.net

TITLE: 10'-2 1/16" OAH SINGLE POLE DRIVE THRU CANOPY AND ORDER STATION

DRAWN BY	DATE	SCALE	DRAWING NUMBER	SHEET	REV.
A. KLOTZKE	04 Dec 23	NONE	2312024	2 OF 2	A
CHECKED BY J. HOGAN	DATE 04 Dec 23				

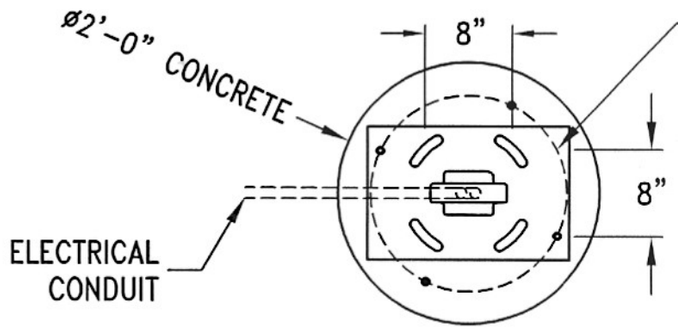

(4) #4 REBAR x 4'-3" LG.
EQUALLY SPACED ON 18" CIRCLE
w/(7) #3 TIES: TOP (3) IN 1st 5",
(2) ON 9" CENTERS, REMAINING (2)
ON 13 1/2" CENTERS.

PLAN VIEW

QTY. CONCRETE: 0.6 CU. YDS.

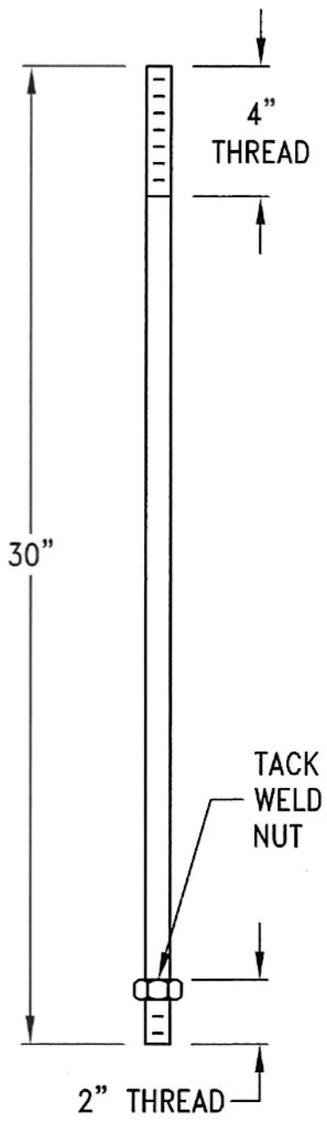

ANCHOR BOLT DETAIL

ø3/4" ASTM F-1554 Gr. 55 STEEL

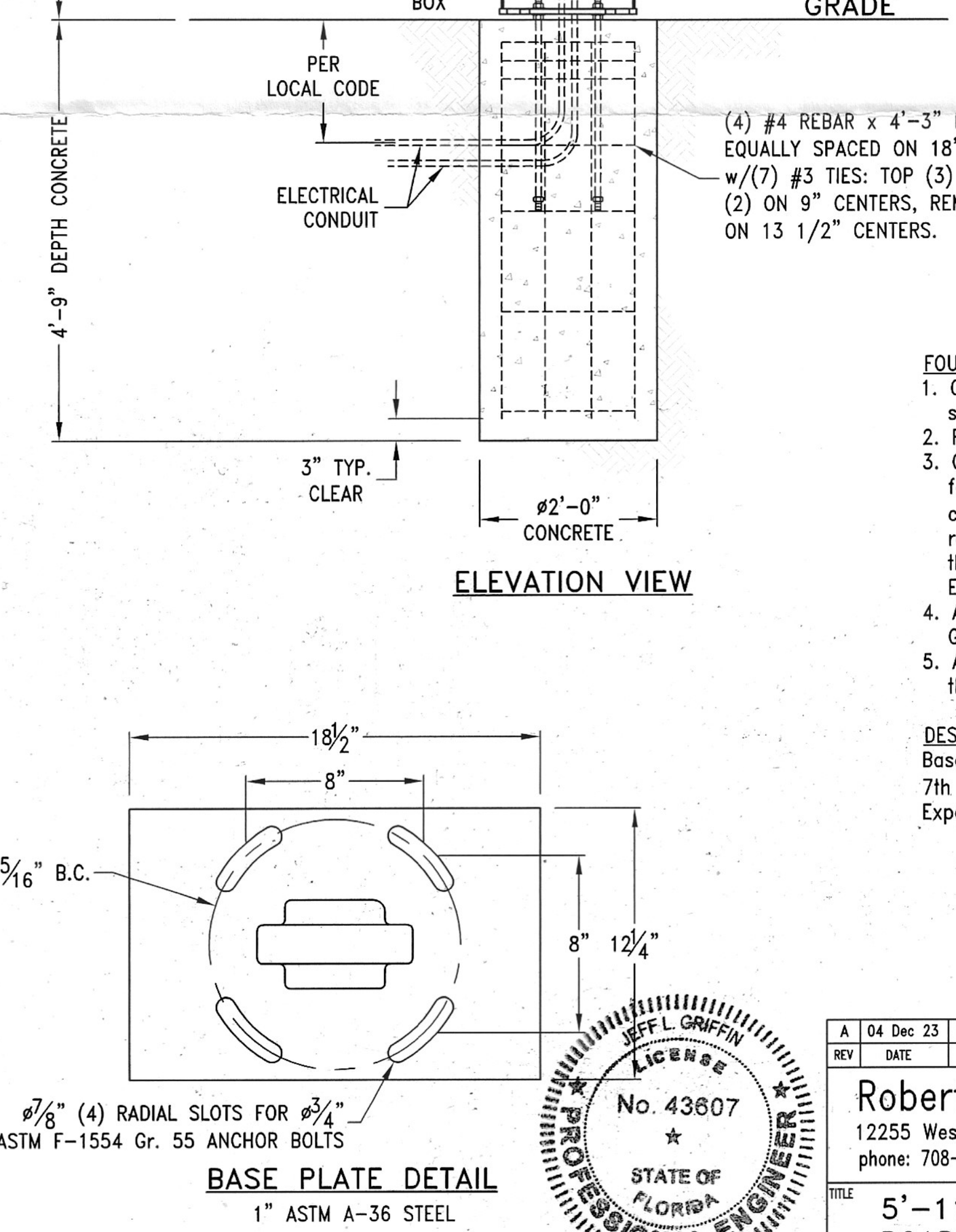

(4) #4 REBAR x 4'-3" LG.
EQUALLY SPACED ON 18" CIRCLE
w/(7) #3 TIES: TOP (3) IN 1st 5",
(2) ON 9" CENTERS, REMAINING (2)
ON 13 1/2" CENTERS.

ELEVATION VIEW

BASE PLATE DETAIL

1" ASTM A-36 STEEL

JEFF L. GRIFFIN
LICENSE
No. 43607
STATE OF
FLORIDA
PROFESSIONAL ENGINEER

FOUNDATION DESIGN NOTES:

1. Concrete shall have a minimum compressive strength of 3000 PSI at 28 days.
2. Reinforcing steel shall be ASTM A-615 Gr. 60.
3. Caisson footing designed using a soil bearing force of 150 PSF per foot Lateral. If this soil condition does not exist, it is the Erector's responsibility to have a new base designed for the existing soil conditions by a Licensed Engineer.
4. Anchor bolts shall be ASTM F-1554 Gr. 55 steel.
5. All electrical work to be done according to the NEC and Local Code.

DESIGN WIND LOAD:
Based on the 2020 Florida Building Code, 7th Edition (ASCE 7-16) using Risk Category II, Exposure C and 155 mph wind speed.

SITE:
Salad and Dash
10 South Jefferson Street
Pensacola, Florida 32502

REV	DATE	DESCRIPTION	APPROVED
A	04 Dec 23	RELEASED FOR PERMITTING	J. HOGAN

Robert-James & Associates, Inc.
12255 West 187th Street, Mokena Illinois 60448-9737
phone: 708-479-8385 fax: 708-479-8395 email: rja37@comcast.net

TITLE: 5'-11 7/16" OAH DRIVE-THRU PRESELL BOARD ON A CAISSON FOOTING

DRAWN BY	DATE	SCALE	DRAWING NUMBER	SHEET	REV.
A. KLOTZKE	04 Dec 23	NONE	2312025	1 OF 1	A
CHECKED BY J. HOGAN	DATE 04 Dec 23				

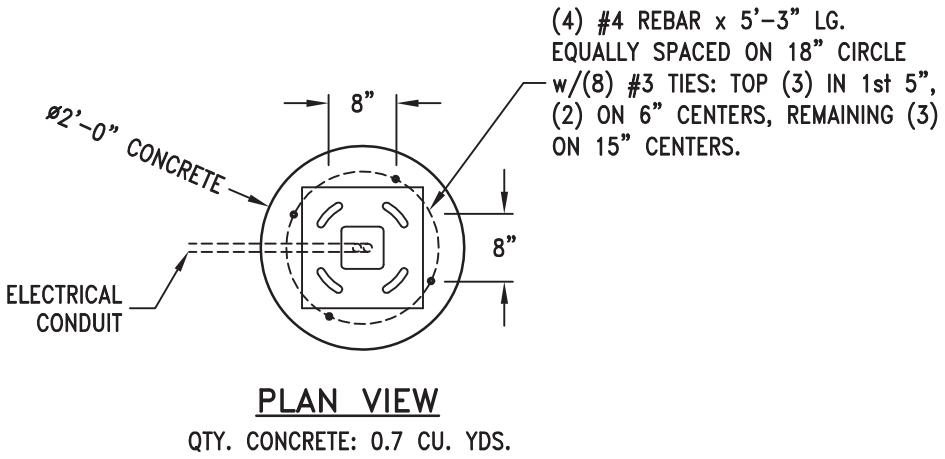

PLAN VIEW

QTY. CONCRETE: 0.7 CU. YDS.

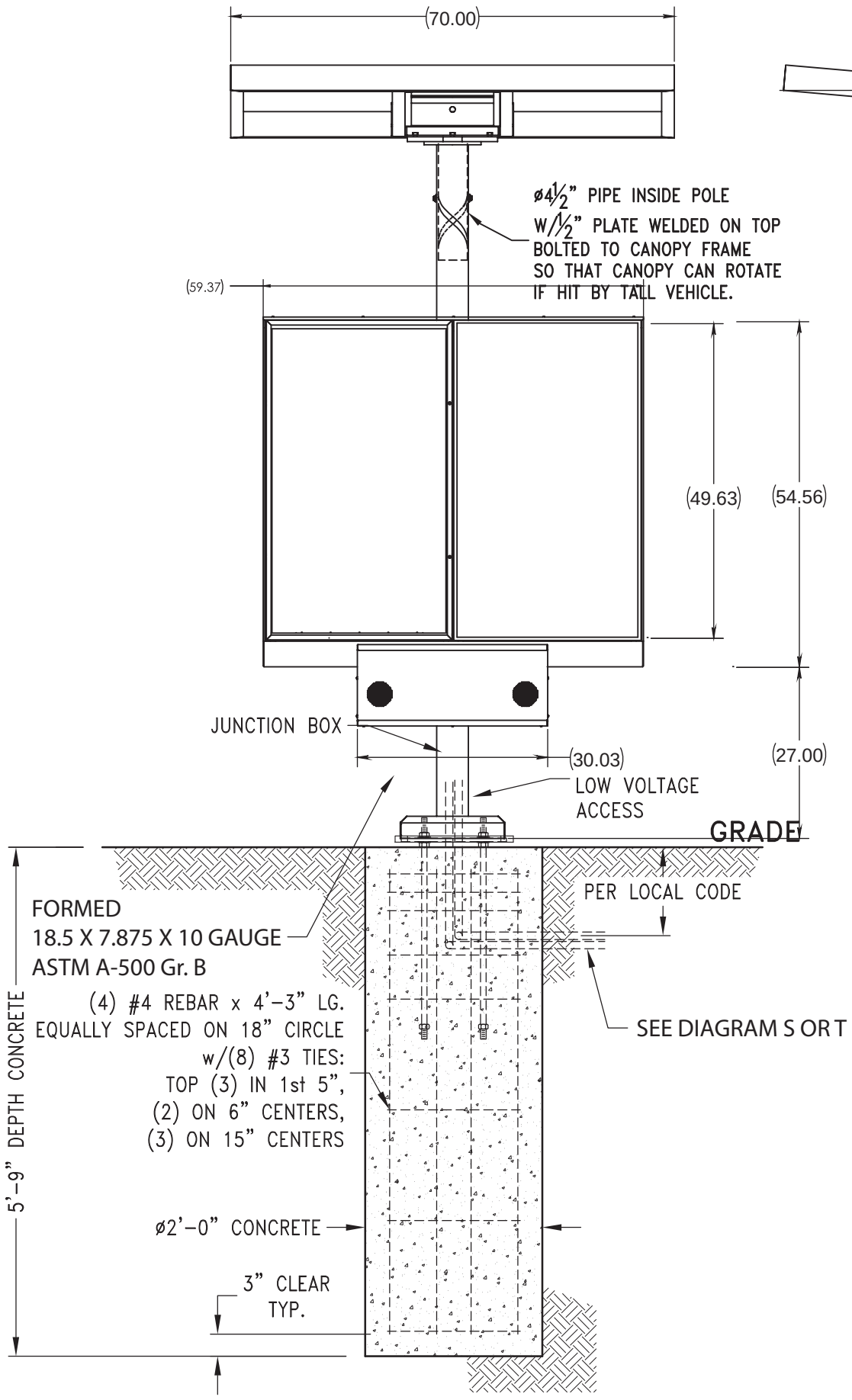

ELEVATION VIEW

SEE DETAIL VIEWS – SHEET 2

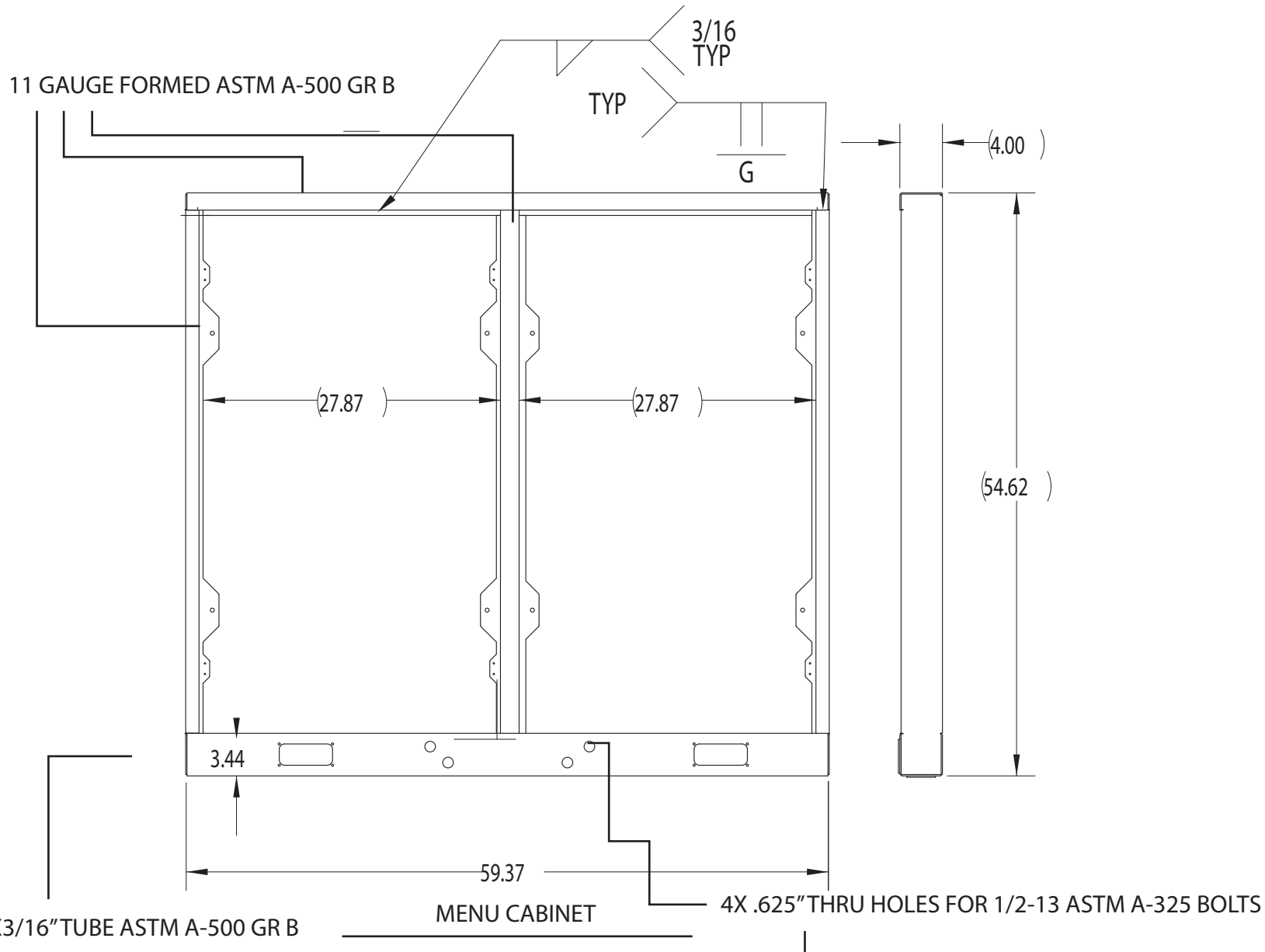

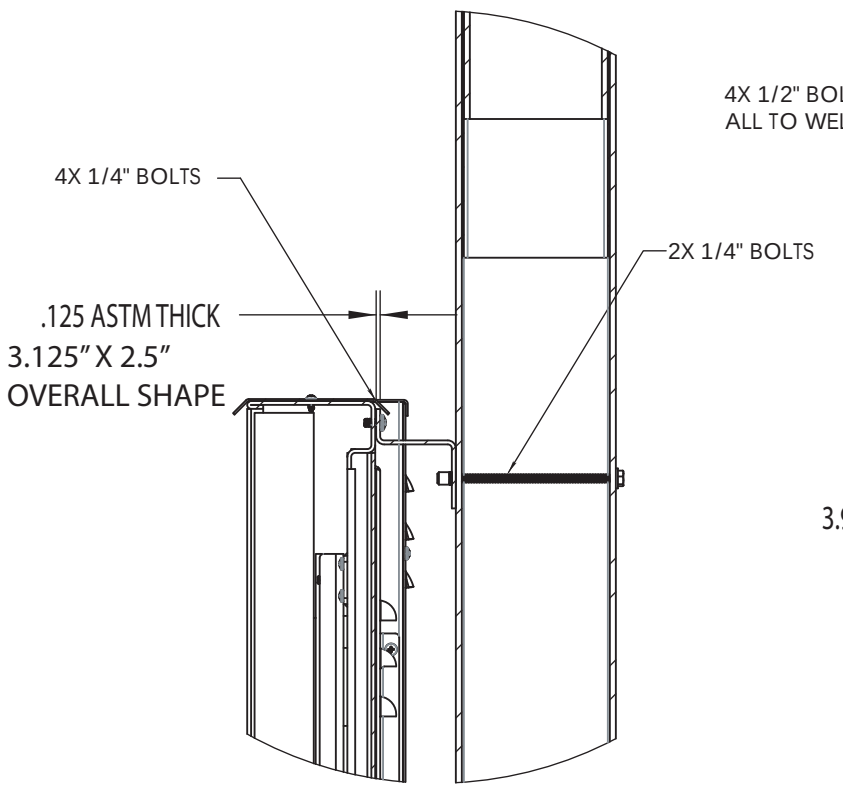

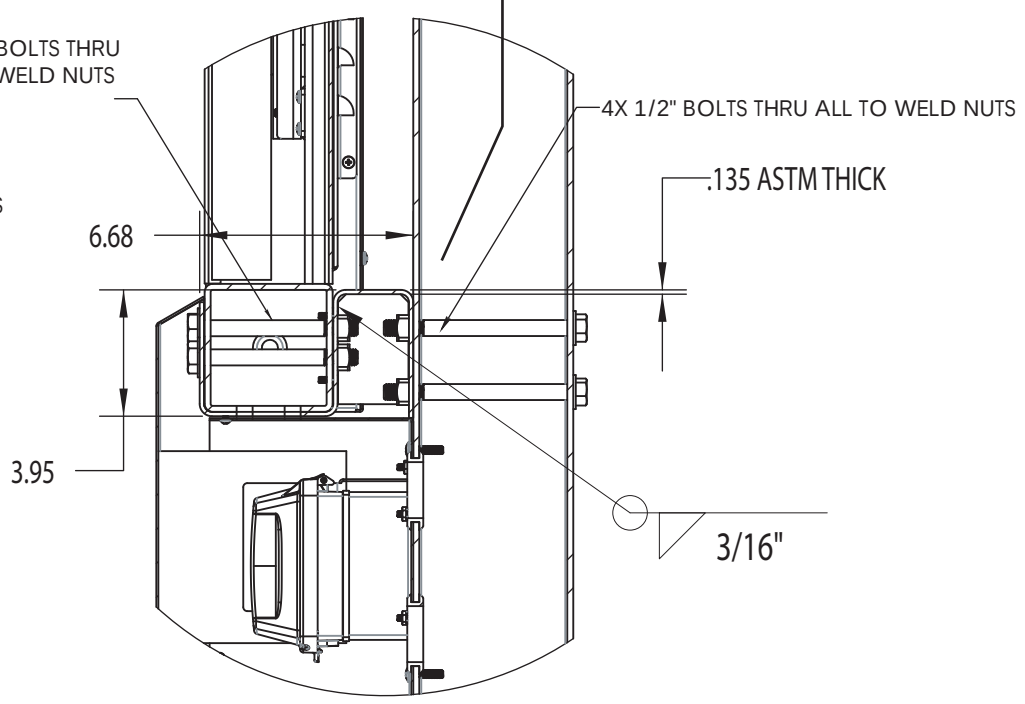

CUT AWAY VIEW TOP POLE TO CABINET CONNECTION

CUT AWAY VIEW BOTTOM POLE TO CABINET CONNECTION

THE HOWARD COMPANY

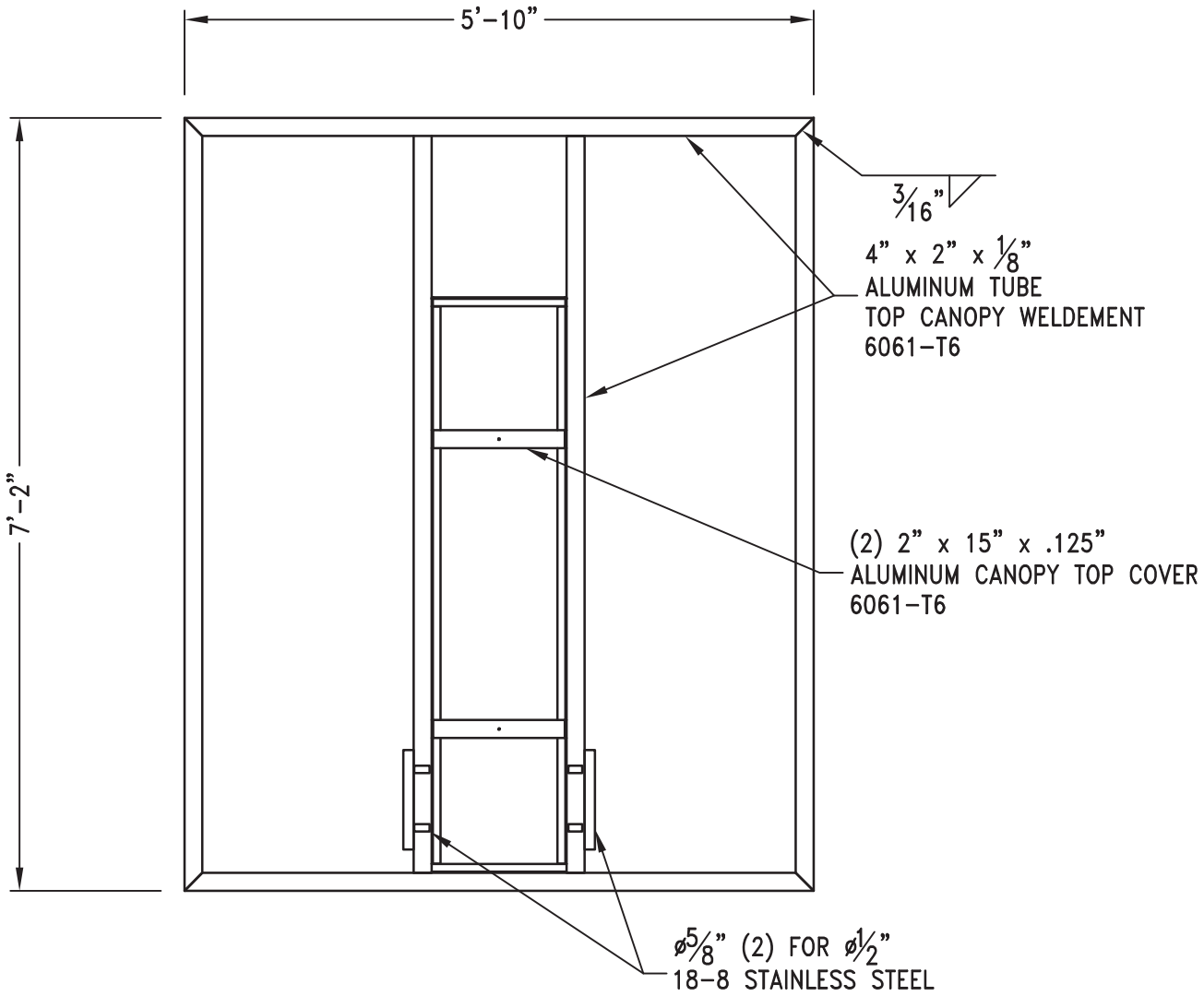

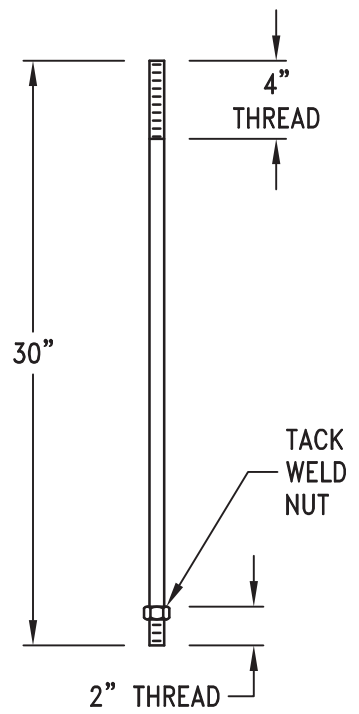

ANCHOR BOLT DETAIL

ø3/4" ASTM F-1554 Gr. 36 STEEL

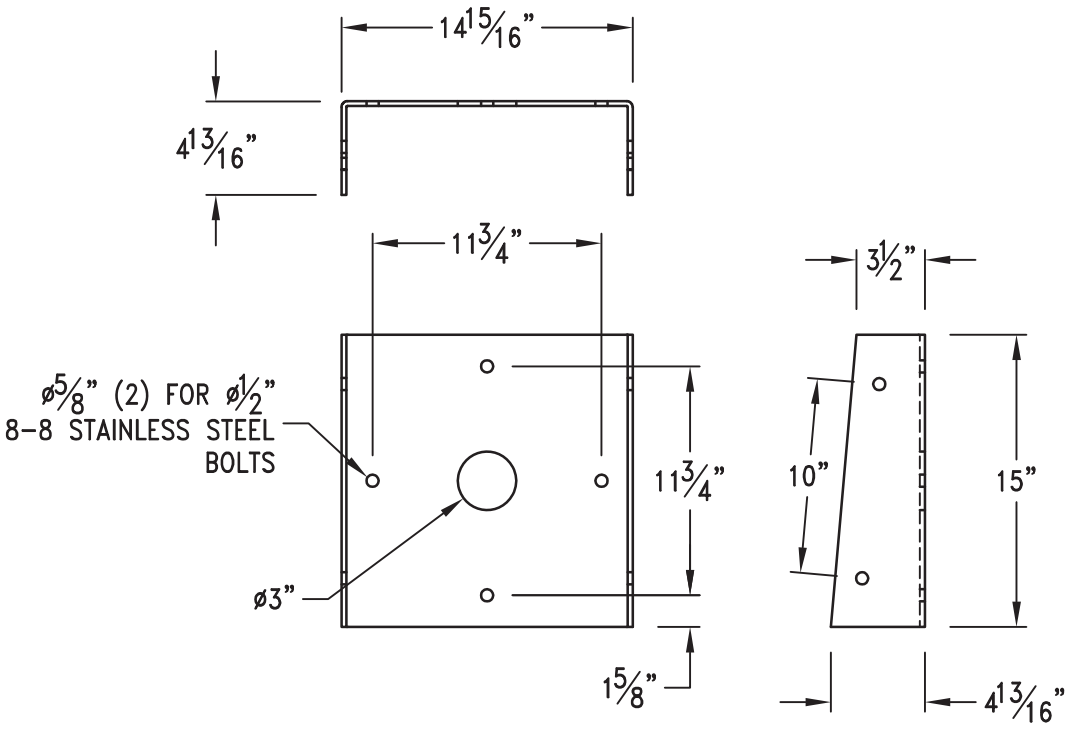

CANOPY TOP PIPE DETAIL

1/4" ASTM A-36 STEEL

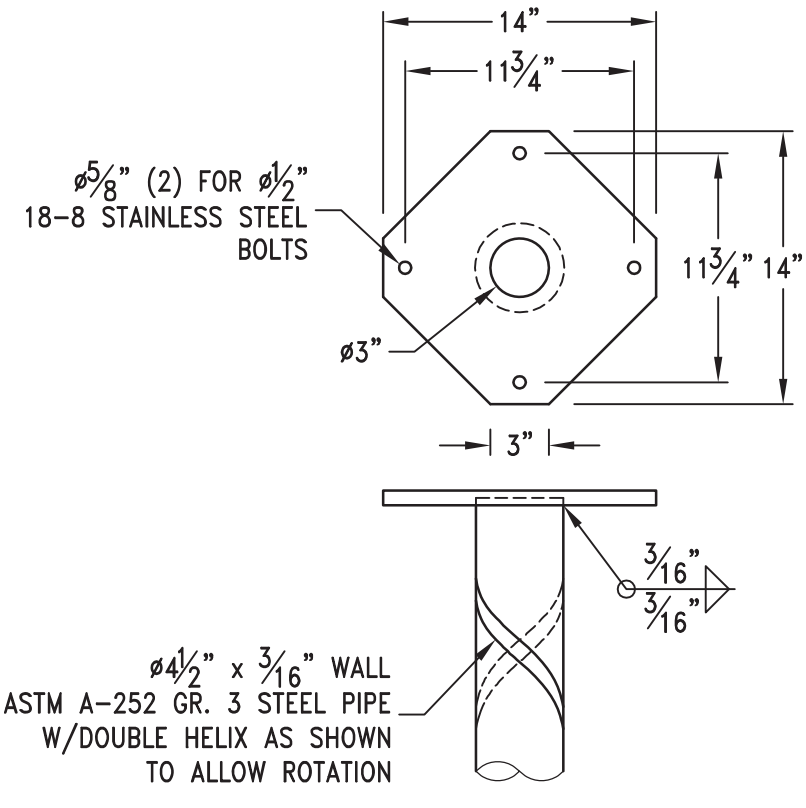

HELIX PIPE TOP PIPE DETAIL

1/2" ASTM A-36 STEEL

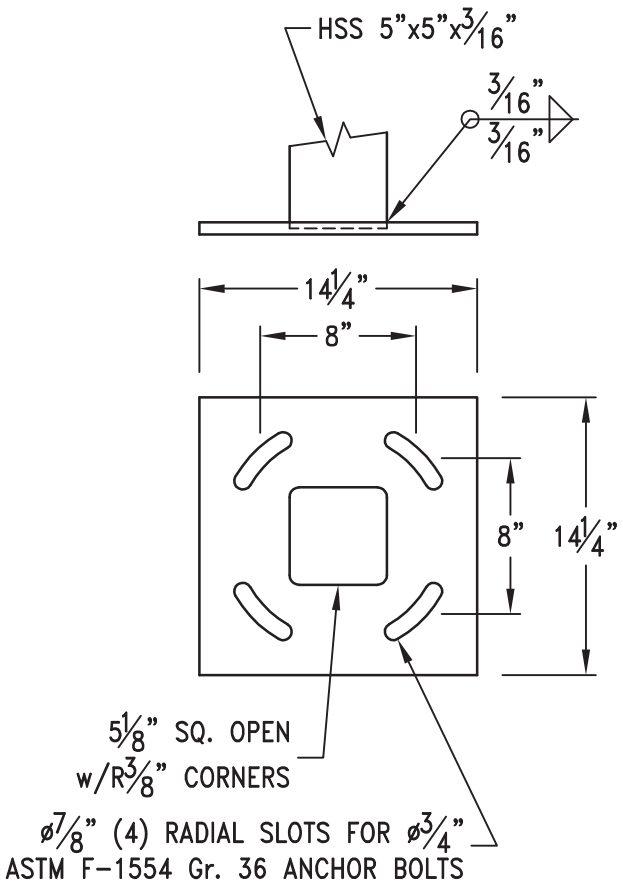

BASE PLATE DETAIL

3/4" ASTM A-36 STEEL

THE HOWARD COMPANY

SOW OF WORK SURVEY

Salad and Dash - Pensacola
10 South Jefferson Street
Pensacola, FL 32502

Johnny Mascia
617-504-6634
jmascia@comcast.net

Site preparation for the installation of the following equipment on Existing Foundations **(power and conduit are the responsibility of the site) – installation by The Howard Company:**

- DT Flex AIO - DD - LG
- DT Flex - D - LG
-
-

Site preparation for the installation of the following technology with existing **power and conduit –installation by The Howard Company:**

- SOC connection to (1) main menu and (1) preview menu monitor
- OCS connection to (1) main menu monitor
- LG Connected Care integration to (3) monitors
- Panasonic headset installation with saw-cut loop installation

Instructions for site preparation for the installation of the following equipment – to be installed by Site **:**

- Foundation, conduit and power for the preview menu board are the responsibility of the location
- Foundation, conduit and power for the main menu board are the responsibility of the location
- Configuration of POS terminal and (1) identified port on the POS network switch or VLAN with proper whitelistings is the responsibility of the location/POS vendor
- (3) open network ports on a switch with open internet access (unrestricted) is the responsibility of the location/IT professional
-

ALL PERMITS ARE THE RESPONSIBILITY OF THE SITE OR INSTALLER AS APPLICABLE BY ORDINANCE
THIS DOCUMENT MUST BE COMPLETED, SIGNED AND RETURNED FOR INSTALLATION SCHEDULING TO OCCUR

THE HOWARD COMPANY

FOUNDATION DRAWINGS

1 - PREVIEW MENU

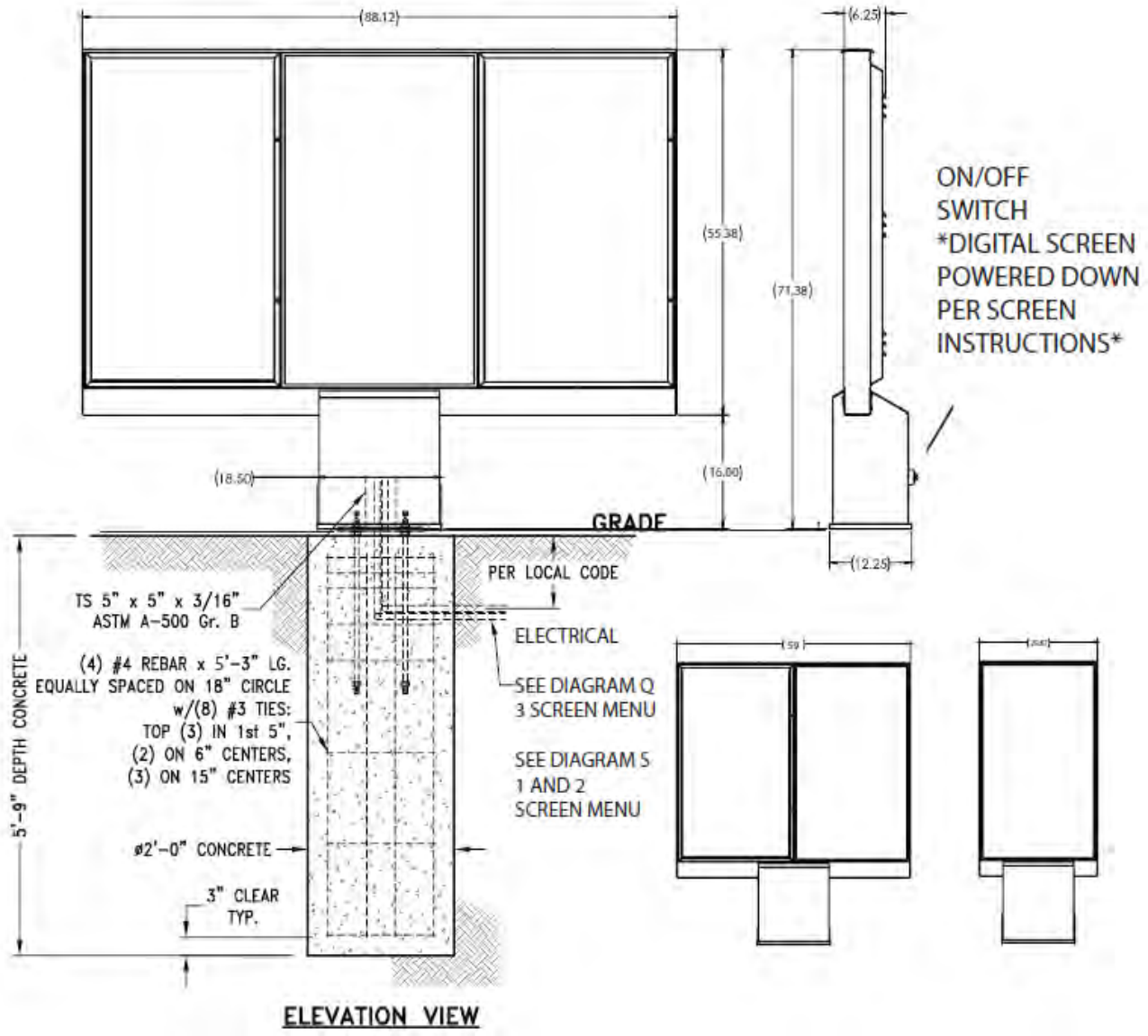

DIAGRAM CC Template & Foundation

STANDALONE

Mounting Template

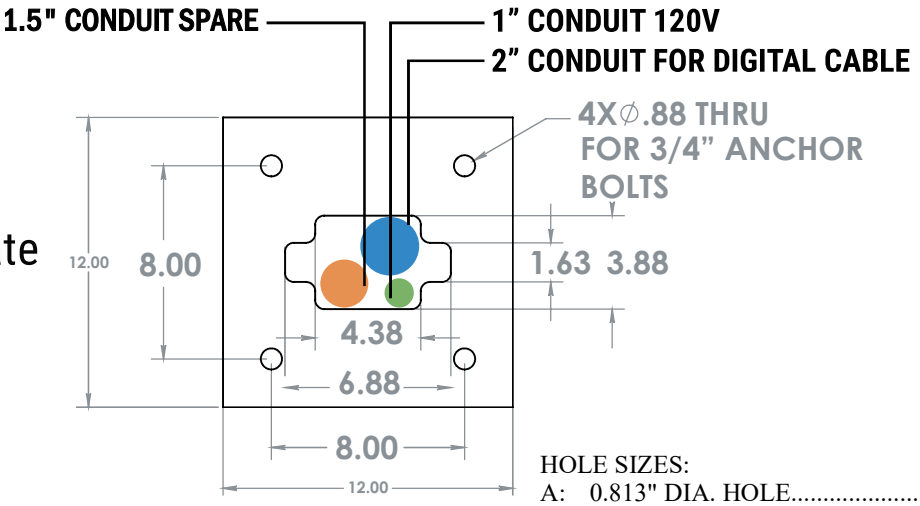

HOLE SIZES:
A: 0.813" DIA. HOLE.....(4 REQD)
B: 2-5/8" SQUARE HOLE.....(1 REQD)

Foundation

The high voltage conduit must be installed in place by a qualified contractor. It runs from the power source to the menu board location. A conduit stub should protrude 4" above the concrete slab **(see Diagram Q)** Use the template supplied for the correct relation between the mounting bolts and the conduit location. Power and ground leads should be pulled through the conduit approximately 12" beyond the conduit stub, and be accessible at the time of final wiring. **Note: The 120VAC power lines run up the inside back of the pedestal base (see Diagram CC, Mounting Template)**

After the location is established, pour the concrete footing per local codes. While the concrete is still soft, insert the four (4) anchor bolts. Use the supplied template as a bolt and conduit locator. Anchor bolts should be 3" above grade (see Diagram F , Foundation. **Note: Prior to placing the template down, one (1) nut must be threaded onto each anchor bolt and sunk into the concrete, flush with the top of the nut.** Place the template over the eight (4) anchor bolts and secure in place with four (4) more nuts.

more nuts.

DIAGRAM Q

1-3 SCREEN DIGITAL MENU

***SECOND LINE OF 120V NOT REQUIRED IF ALL DIGITAL**

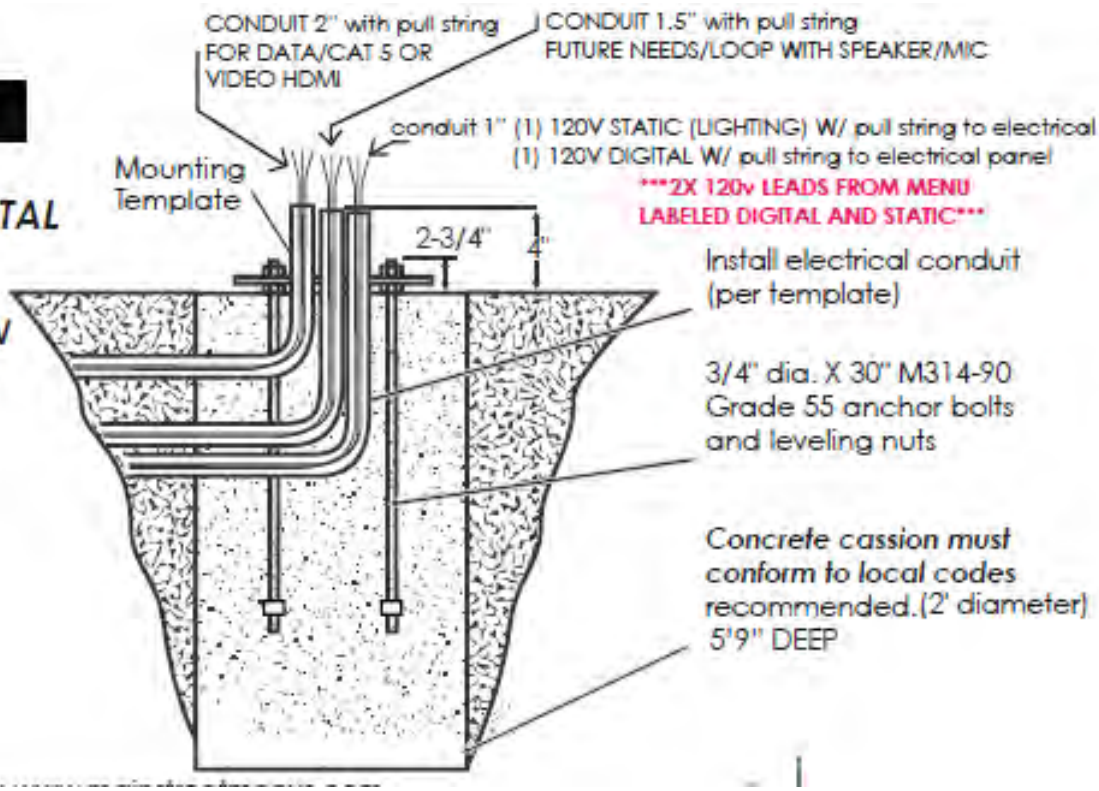

Mounting Menu Board to Foundation

After the concrete has set, remove template and discard. **NOTE: Do not discard the four (4) or, (8) nuts that were just removed.**

The pedestal base plate is now ready to be mounted. Remove any concrete residue from the threads of the anchor bolts. Thread one (1) nut onto each bolt until it stops; then put a flat washer over each bolt. Feed the 120VAC power lines and ground lead into the inside back hole of the bottom of the pedestal base **(see Diagram G).** Set pedistal base onto anchor bolts, place a flat and lock washer over each bolt, and thread on nut.
The top surface of the pedestal base should be rough leveled at this time. Adjust the upper and lower hex nuts until the pedestal base is level and tighten. **NOTE: Final leveling can be done after the menu board is in place (if required).** Use the same procedure as above.

Prepare the pedestal base for mounting the menu board in the following manner: **(See Diagram G).**
Remove the high voltage access cover.

Locate the power leads. These will be hanging from the opening in the bottom of the menu board.
2X 120v LEADS FROM MENU LABELED DIGITAL AND STATIC
Lift the menu board into position, so that the holes in the pedestal base align with the holes in the bottom of the unit. Before placing the menu board all the way down, feed the power leads and ground lead from the menu board opening into the menu post opening.

The menu board is factory wired and needs only to be energized on the job site. This should be done by a qualified electrician only. No disassembly is required. **FOR MENU BOARDS WITH BUILT-IN SPEAKER/MICROPHONE ONLY:** If your menu board has a built-in speaker, run low voltage wires for speaker/microphone unit inside of pedetal base hole, to front of menu board.
Connect speaker/microphone to communication system, as indicated (**See Diagram H**)

Connect unit power leads and grounding conductor (green lead) to the power source. Power source must be 120VAC, 60 Hz. Energize the circuit to check the operation. **WARNING: DO NOT CONNECT THE SPEAKER WIRE TO 120VAC (POWER SOURCE).**
Connect the speaker/microphone (if provided) to the internal communication system **(see Diagram H)**
Replace the high voltage access cover.

WIRING DIAGRAM EXAMPLE BACK VIEW

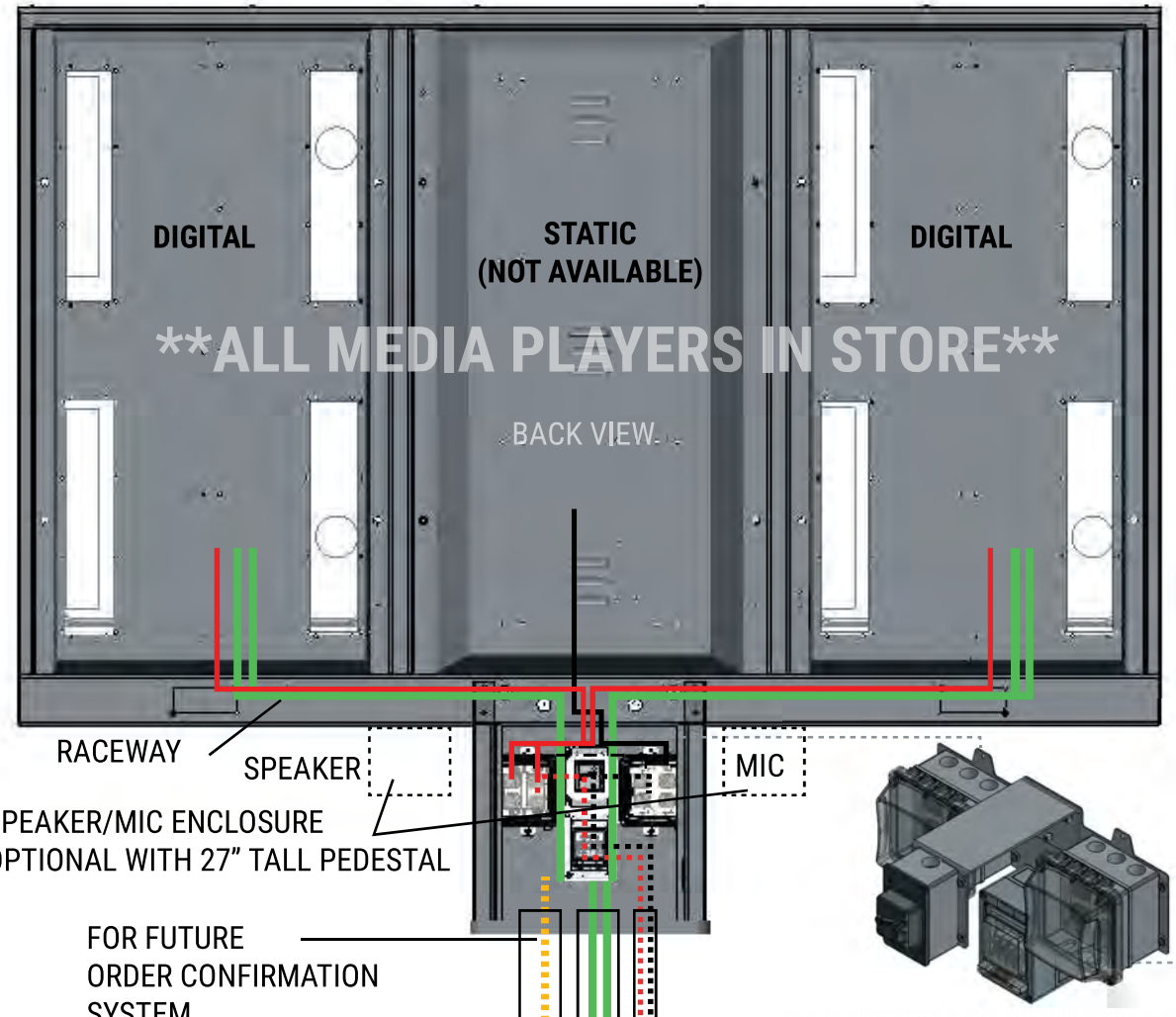

120 VAC PLUG DIGITAL

120 VAC DIGITAL

SPEAKER/MIC/LOOP (JUNCTION FOR COMM/LOOP)

VIDEO VIA HDMI AND DATA VIA CAT6 OR VIDEO/DATA VIA CAT6 (DIRECT TO SCREEN)

120 VAC PLUG STATIC

120 VAC STATIC

POWER 120V

	EA LG SCREEN	3.25A
N/A	EA STATIC MODULE	.5A

TOTAL

EACH RECEPTACLE LINKED TO 20 AMP CIRCUIT BREAKER TOTAL 4

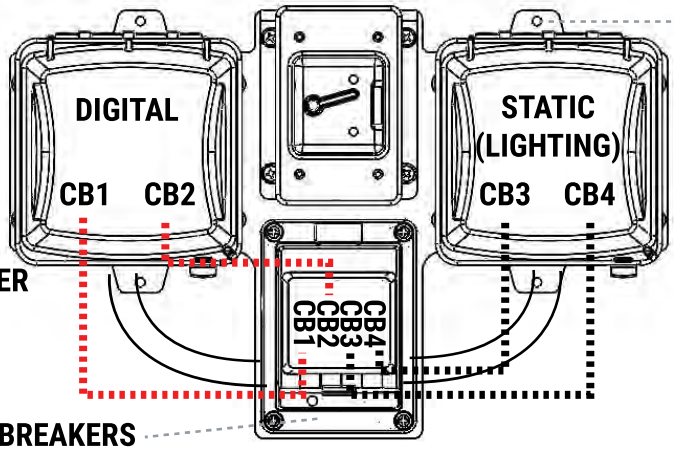

4X CIRCUIT BREAKERS

DT FLEX LG AIO INSTRUCTIONS

INSTALL LOCATION	**PAGE 2**
INSTALL FOUNDATION LOW WIND 115MPH	**PAGE 3-4**
INSTALL FOUNDATION HIGH WIND 160MPH	**PAGE 5-6**
ELECTRICAL WIRING	**PAGE 7**
INSTALL CANOPY	**PAGE 8-9**
INSTALL SCREENS	**PAGE 10-12**
INSTALL GRAPHICS	**PAGE 13**

ONCE INSTALLED DO NOT TURN OFF POWER TO SYSTEM WITHOUT TURNING POWER OFF EACH DIGITAL SCREEN VIA REMOTE. SEE DIGITAL SCREEN INSTRUCTIONS (PACKED 1 PER SCREEN) FOR MORE INFORMATION

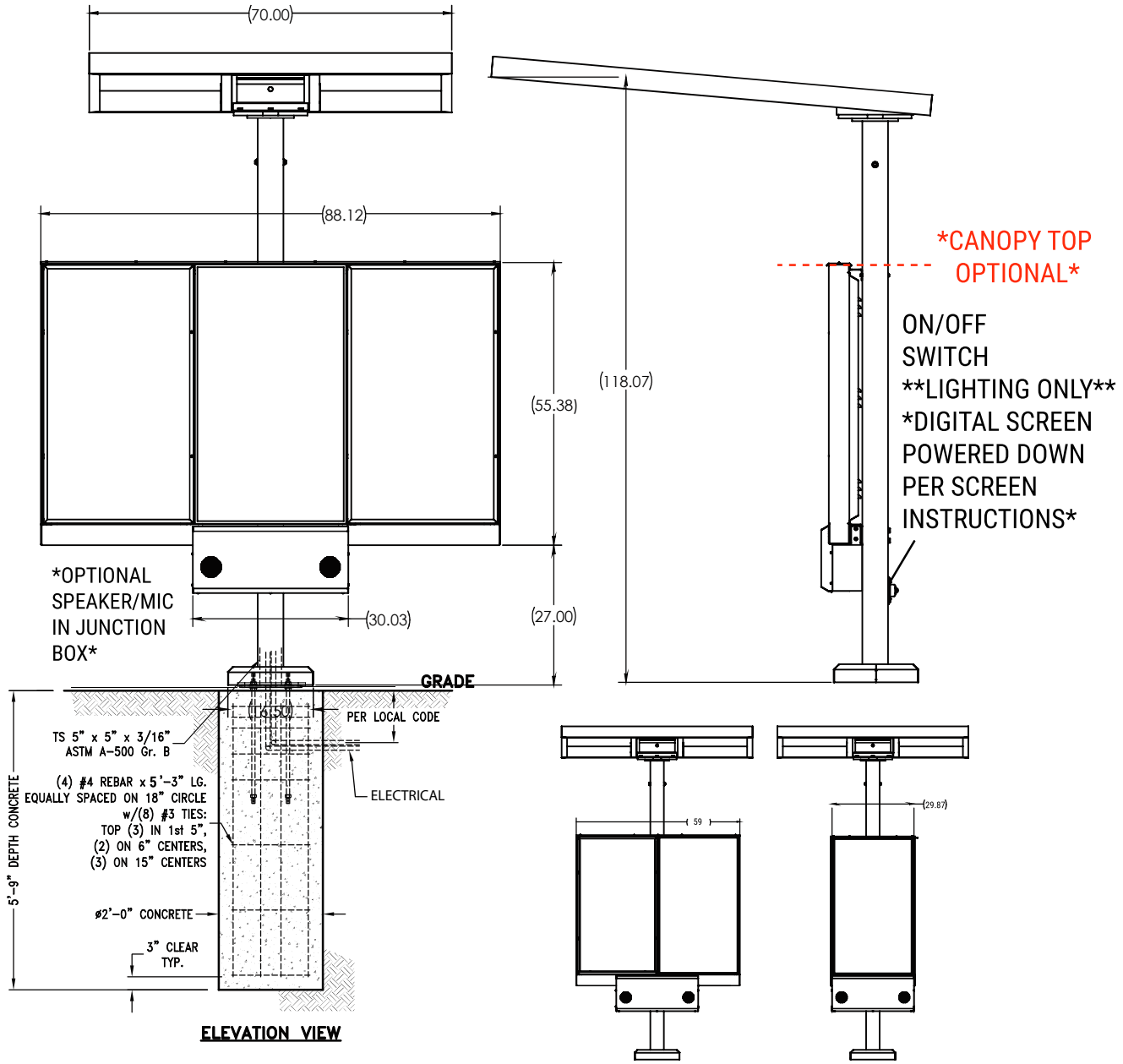

DT FLEX LG AIO INSTRUCTIONS

1. Before beginning the installation, check that you have all the required hardware:

Included With Foundation Kit



(4) Anchor bolts



(8) Hex Nuts

Included With Unit



(4) Hex nuts



(8) Flat washers



(4) Lock washers

2. Determine whether the canopy will be installed on a curved or straight drive (see Diagrams A or B). Follow the proper detail for information about locating the canopy.

3. In the desired location, construct mounting post foundation referencing Diagram T or U and in accordance with local codes.

*****CAUTION EVALUATE WIDTH OF MENU.**
END OF MENU TO BE 12" OR MORE AWAY FROM CURB.***

DIAGRAM A

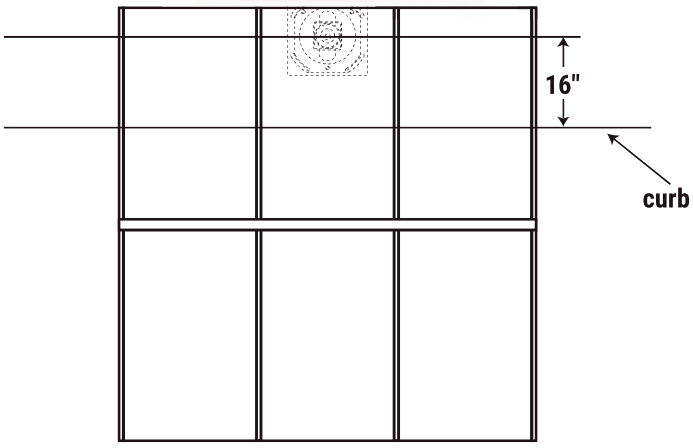

CANOPY LOCATION/POSTIONING
(STRAIGHT)

DIAGRAM B

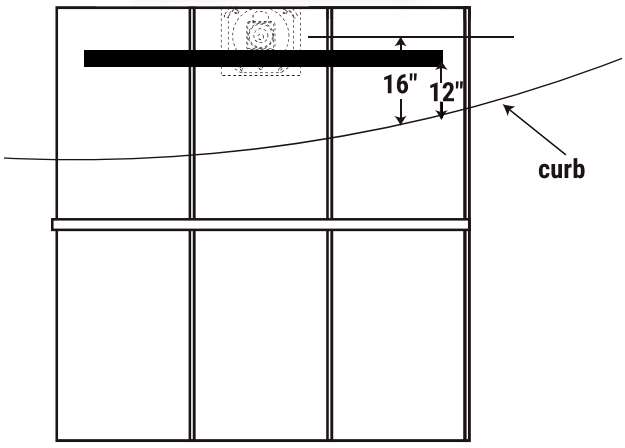

CANOPY LOCATION/POSTIONING
(CURVE)

***Note: These diagrams are to be used as a guide only; if they cannot be followed exactly, some modifications should be made to allow for the best suited location for your installation.

FOR LOW WIND LOAD AREA BELOW 162 MPH

DIAGRAM U

2X 120v LEADS FROM MENU LABELED DIGITAL AND STATIC*

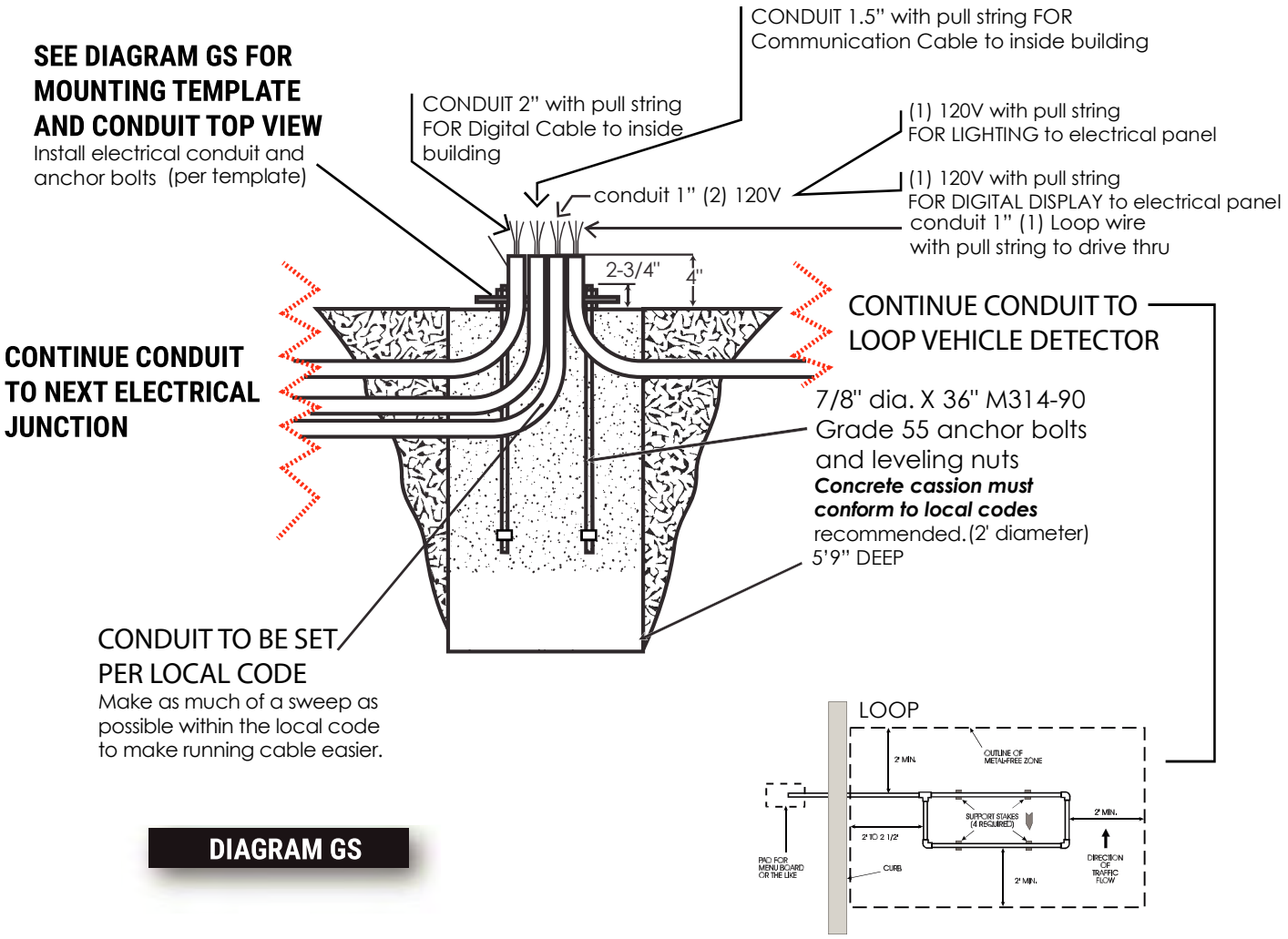

DIAGRAM GS

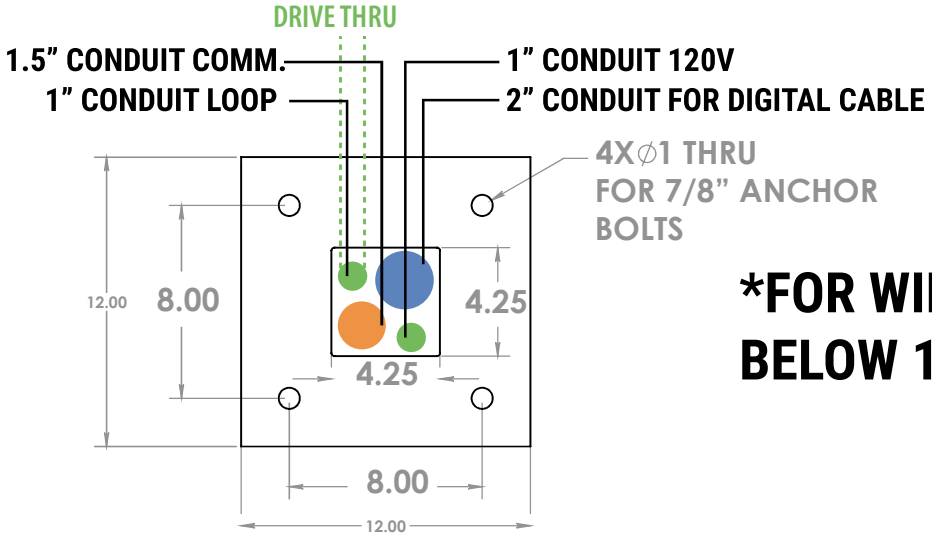

FOR WIND LOAD AREA BELOW 162 MPH

DIAGRAM M

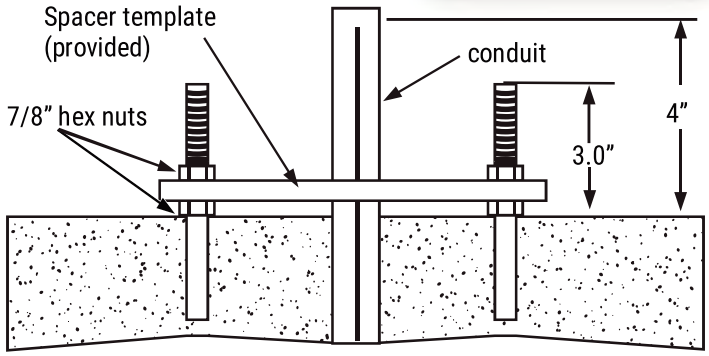

FOUNDATION CONSTRUCTION
(above grade)

DIAGRAM N

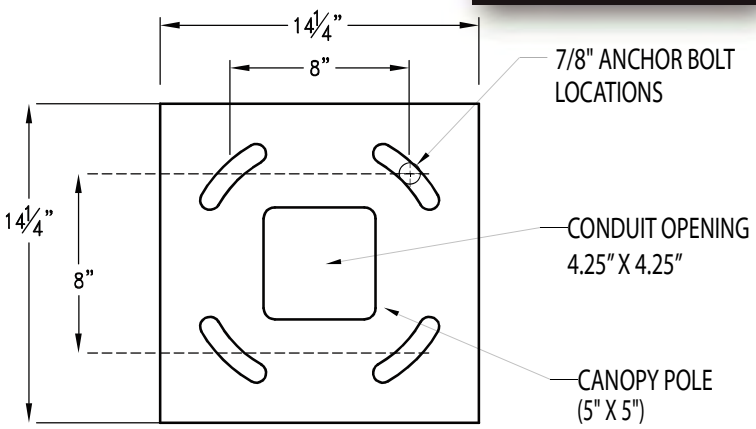

CANOPY POLE ANCHOR BOLT LOCATIONS
(above grade)

DIAGRAM O

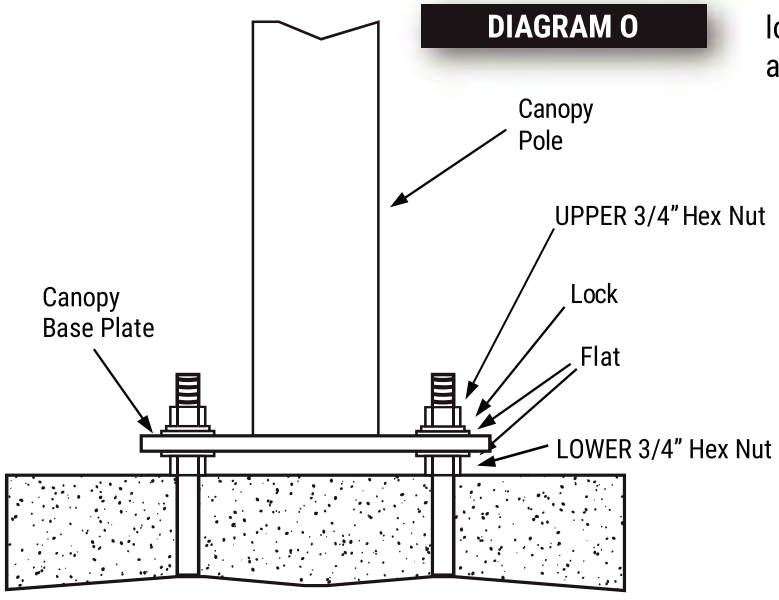

CANOPY POLE MOUNTING

2X 120v LEADS FROM MENU LABELED DIGITAL AND STATIC

4. The high voltage conduit must be installed in place by a qualified contractor. It runs from the source power to the canopy location. A conduit stub should protrude 4" above the concrete slab. Power and ground leads should be pulled through the conduit approximately 30" beyond the conduit stub and accessible at the time of final wiring.

*SEE (FIG GS) EXAMPLE ON PAGE 5

5. After the concrete has set, remove the template and discard.

6. **The canopy is ready to be mounted**. Remove any concrete residue from the threads of the anchor bolts. Thread one nut onto each bolt until is stops; then put a flat washer over each bolt. place the unit onto the foundation making sure all of the anchor bolts are positioned in the corresponding canopy pole holes. Secure the unit with flat washers, lock washers, and 7/8" hex nuts (see Diagram O).

7. **Level the unit** by adjusting the upper and lower hex nuts until the canopy pole is level and tighten the nuts.

FOR WIND LOAD AREA BELOW 162 MPH

WIRING DIAGRAM EXAMPLE FRONT VIEW

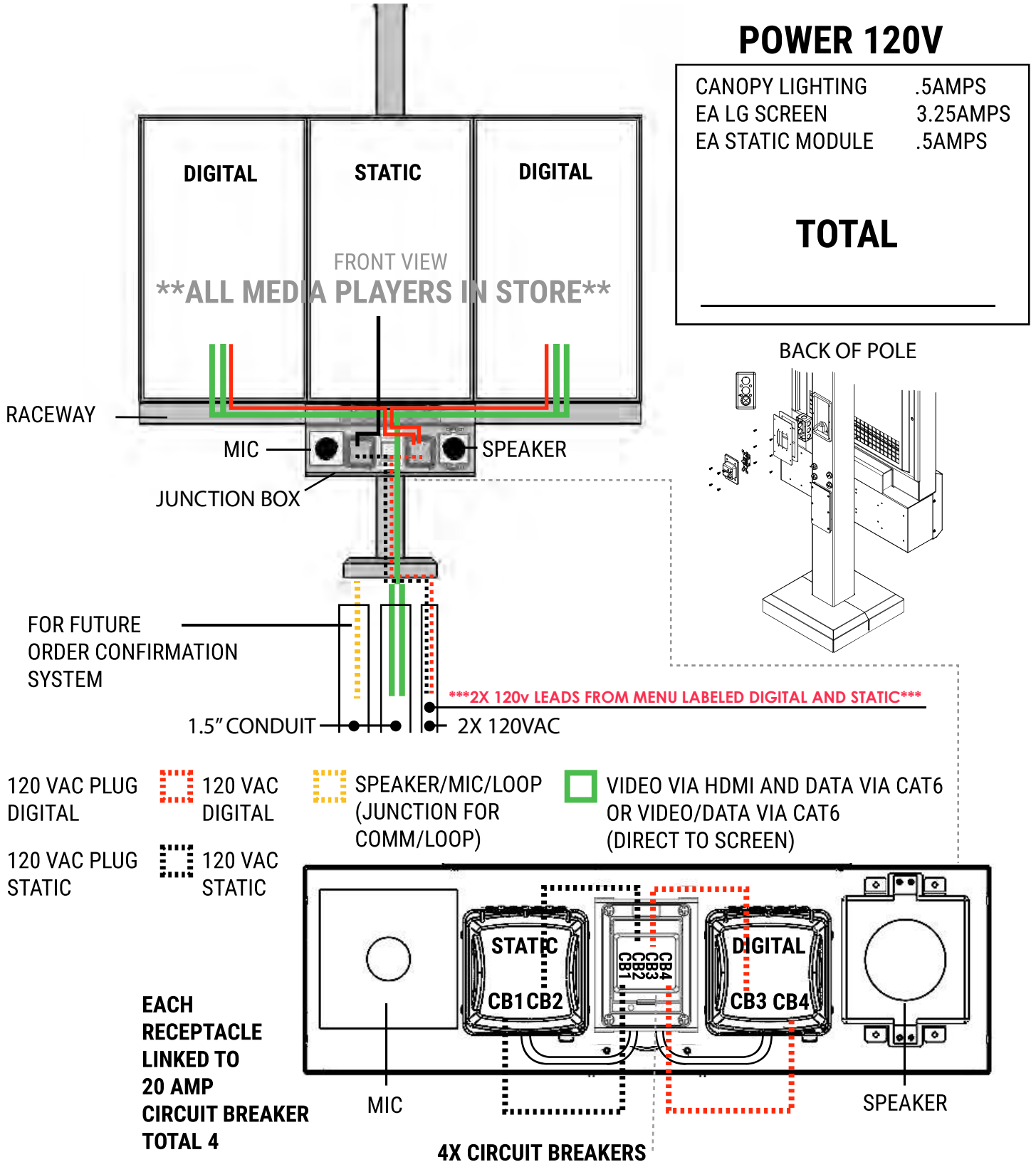

POWER 120V

CANOPY LIGHTING	.5AMPS
EA LG SCREEN	3.25AMPS
EA STATIC MODULE	.5AMPS

TOTAL _____

BACK OF POLE

STEP 3 INSTALL DT FLEX STRUCTURE

Mount structure to lower bracket as shown using (4) 1/2-13 X 5” hex bolt and (4) 1/2-13 washer. Slide bolts through front of structure and into weld nuts in lower bracket. Mount structure to upper bracket using (2) 1/2-13 X 5” hex bolt and (2) 1/2-13 washer.

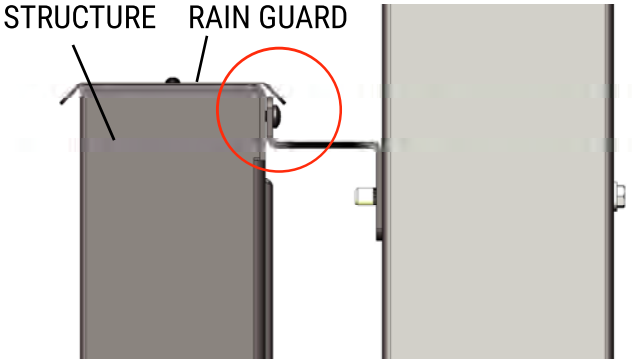

UPPER BRACKET FITS BETWEEN RAIN GUARD AND STRUCTURE

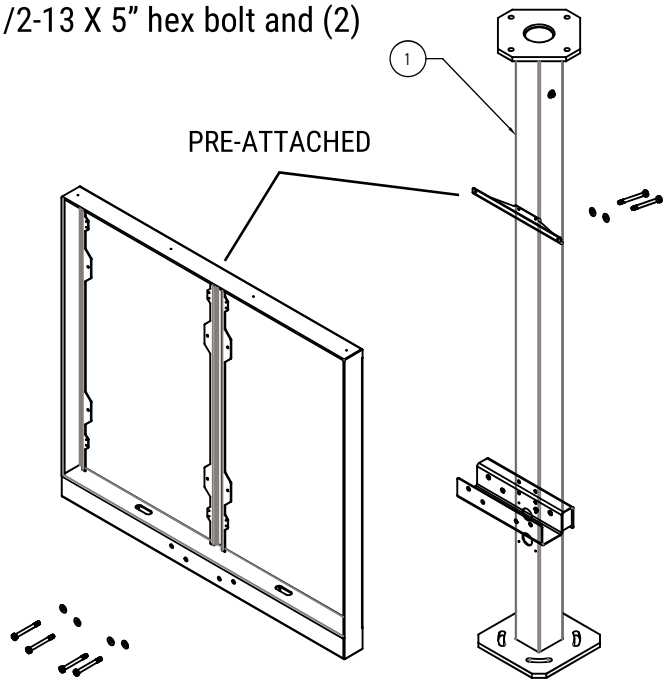

STEP 4 INSTALL DT FLEX JUNCTION BOX

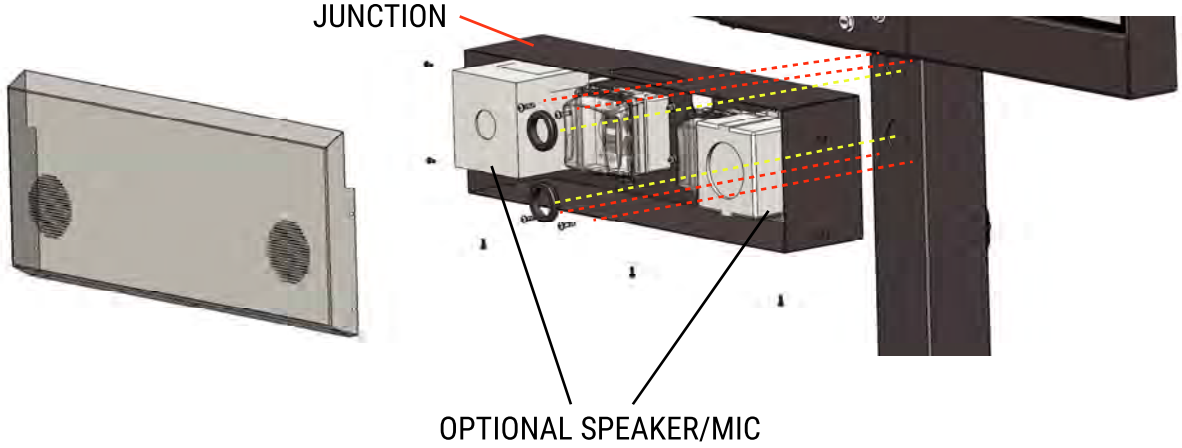

Mount junction box to pole using (4) 1/4-20 X 1” PPH and (4) 1/4-20 washer as shown. Fit (2) 1.75” inside diameter grommets over electrical pass thrus between junction box and pole. The speaker and mic built into the junction box is optional. Speaker and mic can also be added as a wing to the menu structure. The cover fits over the junction box and covers the menu structure’s bolt heads. (7) Pin-in-torx screws secure the cover over the junction box.

Note: Leave cover off until all electrical connections are made.

DIGITAL SOLUTIONS

THE HOWARD COMPANY



Salad ń Dash

and

THE HOWARD COMPANY

DRIVE-THRU DIGITAL PRODUCTS

Salad and Dash Drive-Thru Comparison

Product or Service	*FULL DIGITAL W/DITIGITAL PRESELL and OCS*	*DIGITAL MAIN MENU W/STATIC PRESELL*
Main Drive-Thru Board	$ 15,971.00	$ 15,971.00
Presell	$ 8,400.00	$ 3,990.00
Software	$ 1,200.00	$ 800.00
Design and Content Management	$ 1,100.00	$ 750.00
Software Maintenance-Recurring Yearly Bill	$ 400.00	$ 400.00
Monitor Remote Software	$ 285.00	$ 190.00
Whiteglove Warranties for Outdoor Monitors	$ 2,190.00	$ 1,460.00
Headset System-3 Headsets	$ 4,590.00	$ 4,590.00
Saw Cut Magnetic Loop	$ 264.00	$ 264.00
Structural Stamped Engineering Drawings	$ 1,150.00	$ 1,150.00
Survey-Verify Site Readiness	$ 470.00	$ 470.00
Installation-Digital Connections to Outdoor	$ 1,200.00	$ 800.00
Installation-Sawcutting and putting in magnetic	$ 900.00	$ 900.00
Installation-Communication/Headset	$ 900.00	$ 900.00
SpotOn Order Confirmation Integration Software	$ 3,000.00	$ 3,000.00
Media Player for Spoton Order Confirmation	$ 560.00	$ 560.00
Installation of Order Confirmation	$ -	$ -
Installation-Placement of All Fixtures and Electrical Hookup	$ 6,420.00	$ 5,900.00
EQUIPMENT AND INSTALLATION TOTAL	**$ 49,000.00**	**$ 42,095.00**
SHIPPING	$ 3,554.00	$ 3,116.00
TAX 7.5%	$ 3,941.55	$ 3,390.83
TOTAL	$ 56,495.55	$ 48,601.83

THE HOWARD COMPANY

DRIVE-THRU FLEX (DIGITAL)

Experience the many advantages of going digital with the drive-thru flex digital menu board!

- Reliable
- Easy to read in all light sources
- Weatherproof
- Easy to maintain
- Cost-effective approach, as it comes with the option to interchange static and digital displays



THE HOWARD COMPANY

DRIVE-THRU FLEX (DIGITAL)



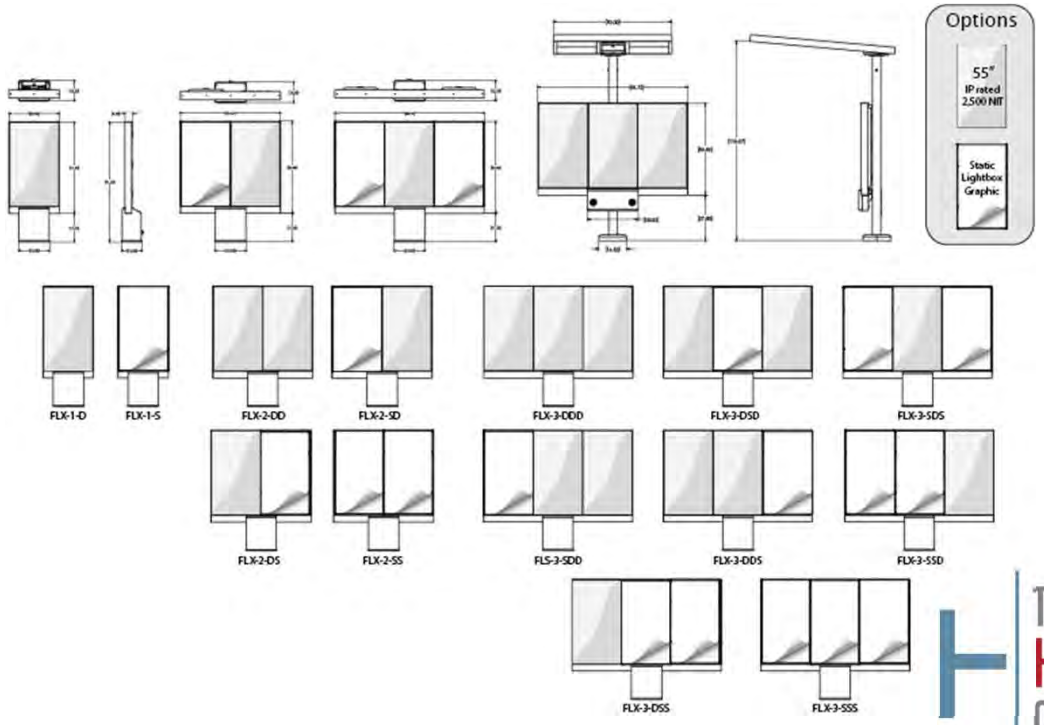

THE HOWARD COMPANY

DRIVE-THRU ALL-IN-ONE SOLUTION

Our stand alone, all-in-one solution is a great solution for businesses with drive-thru lanes in confined areas.

- Includes:
  - Flat-top canopy
  - Menu board
  - Order confirmation system with a speaker and a microphone



THE HOWARD COMPANY

DRIVE-THRU ALL-IN-ONE SOLUTION







THE HOWARD COMPANY

seconded the motion.

Ms. Manis asked for clarification on the treatment for addressing the fact the rear elevation is four inches and the front elevation is roughly 30 inches. Board Member Mead clarified that it is fine if the rear foundation reveal diminishes to four inches, if that is what is needed to get below 30 inches on the front. Or the if the foundation remains as depicted, the rail is fine too. Board Member Ramos asked if the board was approving the railing that is in the package. Board Member Mead noted yes, approved as submitted. Board Member Ramos asked if the board had approved a rail with that profile in the past in that district. Assistant Planning and Zoning Division Manager Harding noted yes the board has approved a similar rail in the past and typically the wrought iron look has been approved in all the districts and it depends on the architecture. Board Member Ramos noted that the motion is clarified rather than amended. Board Member Mead noted that both the right and left elevations should be submitted for abbreviated review in regard to the horizontal windows.

The clarified motion carried 6-0.

Item 6 21 E. Garden Street PHBD / Zone C-2A, City Council District 6
Renovation of a Non-Contributing Structure
Action Taken: Approved.

John Mascia is seeking approval to renovate a non-contributing drive thru bank facility into a drive thru and pick up restaurant. The proposal includes painting the exterior; removing the bank ATM machine, an awning, and an access panel to be infilled with brick veneer wall to match the existing; removing one curb; and replacing the existing drive thru window.

Steve Del Gallo represented the project as the building manager. Board Member Mead asked staff for clarification on what historic district this property falls in and the scope of the board's review on things like colors and the like. Assistant Planning and Zoning Division Manager Harding noted it is Palafox Historic Business District and since paint colors are included as part of the overall permitted work or requested work, the board does have review authority on colors; however, colors in the Palafox Historic Business District do not have to follow historical palettes. Board Member Mead asked the applicant if the signage and coloring in the application represent what is being proposed or is it an example. Mr. Del Gallo noted that the application included an image of an existing facility in Boston and the orange color is on brand and the existing structure is fairly close to the proposed gray color. Board Member Mead asked if the signage was also being reviewed for approval. Mr. Del Gallo stated no, there will be no signage on the structure itself. There is an existing monument sign from Wells Fargo on Jefferson Street that will be used. Assistant Planning and Zoning Division Manager Harding noted that all signage will come back for abbreviated review. The existing monument sign is one of a few internally illuminated signs, which is now prohibited; however, since it is existing non-conforming, it has traditionally been allowed to change out the face but the second the structure is altered, it becomes non-conforming and it must be taken down. Based on discussions with the applicant, just the face will be changed out.

Board Member Mead asked if there will be changes to the lighting. Mr. Del Gallo stated no, the canopy is lit and there are parking lot lights, so it is sufficiently lit at night. Board Member Fogarty asked about the multiple drive thru lanes and if they will be utilized. Mr. Del Gallo noted that the structure will not be modified and the one island is being removed because it is narrow and difficult to maneuver up to the window. There is no plan to change any of the other drive thru lanes. Mr. Del Gallo clarified that the plan is to enter from Jefferson Street and loop around into the drive thru, and

the plan is to close off the Brue Street access.

Board Member Yee made a motion to approve. Board Member Mead seconded the motion and it carried 6-0.

Item 7 23 W. Cervantes Street NHPD / Zone PC-1, City Council District 6
Renovation of a Non-Contributing Structure
Action Taken: Approved.

Jordan Yee is seeking approval to renovate a non-contributing vacant service station for a new business. The proposal includes enlarging one of two existing doors in the west brick elevation, the second door being infilled; installing a new egress door in the east brick elevation; replacement of existing fluorescent canopy lighting with new low profile LED lighting; replacing the existing shingle roof with a new shingle roof; painting the existing metal siding and trim; and painting the existing brick. The existing aluminum storefront will remain.

Jordan Yee represented the project and noted that the applicant has interacted with the North Hill Neighborhood Association, and they seem to be positive with the adaptive reuse and appreciate the minimal changes to the exterior, isolated to painting the structure and swapping out the under-canopy lights. The old fluorescent tube lights are likely inoperable, and the new fixtures are similar in proportion. Chairperson Salter noted the North Hill Preservation Association provided comments with no objections. Board Member Fogarty asked for clarification on where parking would occur. Mr. Yee stated that the applicant had a pre-app meeting with FDOT and it was requested that one of the Cervantes Street curb cuts be closed, but it is not clear which one. The applicant is not proposing any changes to pavement. The conditional use application included a site plan that indicates the dumpster location on the southwest corner of the building where the door is being infilled. There is a 30-foot rear yard, and the new dumpster pad will be in the rear grass area. A striping plan will make use of the existing pavement.

Assistant Planning and Zoning Division Manager Harding noted that restaurants are not allowed by right in the PC-1 zoning district, so the applicant is seeking a conditional use that is going to the Planning Board in June and if approval is recommended, will go on to City Council. While in PC-1 this structure is also in the downtown CRA and because this is proposed to be an eating and drinking establishment, there is a 100% parking reduction. If there will be parking, as part of the permitting process a striping plan will be required.

Board Member Mead asked for clarification about restaurants not being allowed in PC-1 zoning district. Assistant Planning and Zoning Division Manager Harding answered that restaurants are only allowed in PC-1 as a conditional use, so it must go to Planning Board and City Council to be allowed. Board Member Mead noted that Hopkins House was a restaurant that once operated right across the street in PC-1, so the proposal for this restaurant is replacing something that was lost and not adding a use that was never there before. Assistant Planning and Zoning Division Manager Harding noted this fact will be included in the minutes and the goal of coming before ARB prior to the Planning Board was the ability to include the ARB minutes as a part of the Planning Board packet that will go to City Council. The ARB's comments will be in support or opposition to the project when Planning Board considers the conditional use request.

Board Member Mead asked if the intent was to use the roll up doors. Mr. Yee noted they are the existing roll up doors and imagines they will be open on nice days. Board Member Mead asked about

City of Pensacola
America's First Settlement And Most Historic City

Architectural Review Board Application
Abbreviated Review

Application Date: 02/16/24

***Project Address*:** **10 South Jefferson St, Pensacola FL 32502**

Applicant: **Salad n Dash - John Mascia**

Applicant's Address: **3711 N Palafox St, Pensacola FL 32505**

Email: **jmascia@comcast.net - leterip2@icloud.com** Phone: **617-504-6634**

Property Owner: **Steve Delgallo**
(If different from Applicant)

District: ***PHD*** ☐ ***NHPD*** ☐ ***OEHPD*** ☐ ***PHBD*** ☑ ***GCD*** ☐

There is a $25 Application Fee for the following project types:

☐ Change of Paint Color(s)
Body: _____
Trim: _____
Accent: _____

☑ New/Replacement Sign(s)
Sign Type: **Drive Thru Menu** - Static nonlighted
Dimensions: **See drawings after for specific dimensions**
Colors: **Multiple items - see drawing package**
Description: **Drive Thru Menu Sign**

☐ Minor Deviation to an Approved Project / Change of Roofing Material

FEBRUARY 2024 ABBREVIATED REVIEW

(Office Use)

This request was reviewed and meets the criteria for an Abbreviated Review.

Adrianne J. Walker
ARB Secretary Signature

2/20/2024
Date

This request was reviewed and ~~approved by~~ the following members of the Architectural Review Board:

2-22-2024
Architect Signature / Date

Comments: This is a new sign type and installation for the district and should be discussed by the full board.
-DS

Comments: _____

_____
UWFHT Representative Signature / Date

Planning Services
222 W. Main Street * Pensacola, Florida 32502
(850) 435-1670
Mail to: P.O. Box 12910 * Pensacola, Florida 32521

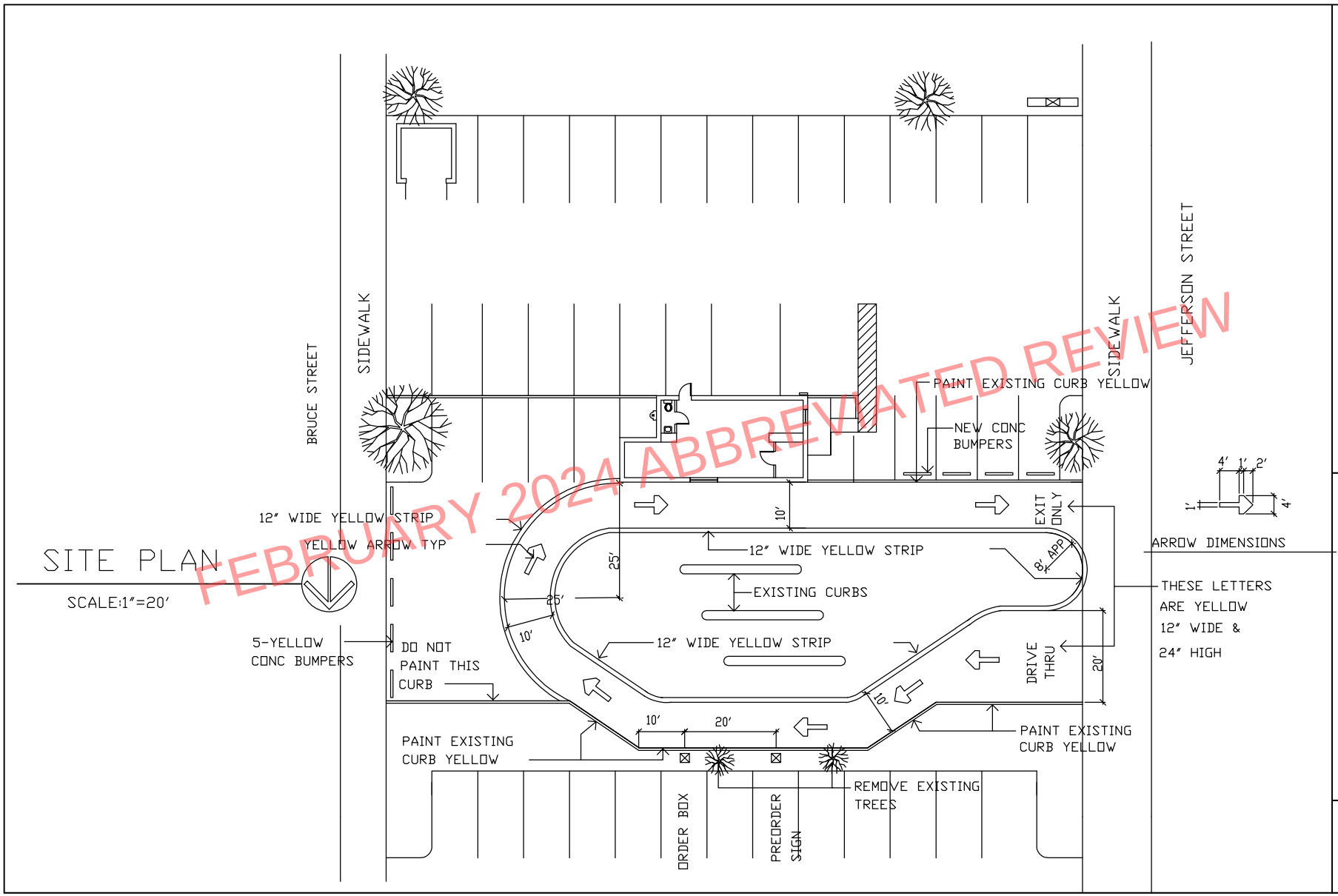

BRETT DUCH ARCHITECT
BRETT@BRETTDUCH.COM 393 7547

SALAD N DASH
21 E GARDEN STREET

C-2



Salad n Dash

and

THE HOWARD COMPANY

FEBRUARY 2024 ABBREVIATED REVIEW

STATIC NON-LIGHTED DRIVE-THRU MENUS

FEBRUARY 2024 ABBREVIATED REVIEW

THE HOWARD COMPANY

Salad and Dash Drive-Thru Comparison

Product or Service	*STATIC MENU BOARDS*
Main Drive-Thru Board	$ 7,600.00
Presell	$ 3,990.00
Software	$ 800.00
Design and Content Management	$ 750.00
Headset System-3 Headsets	$ 4,590.00
Saw Cut Magnetic Loop	$ 264.00
Structural Stamped Engineering Drawings	$ 1,150.00
Installation-Outdoor Survey-Verify Site	$ 470.00
Installation-Digital Connections to Outdoor	$ 800.00
and putting in magnetic loop detector	$ 900.00
Communication/Headset System	$ 900.00
SpotOn Order Confirmation Integration	$ 3,000.00
Media Player for Spoton Order Confirmation	$ 560.00
Installation of Order Confirmation	$ -
Installation-Placement of All Fixtures and Electrical Hookup	$ 5,900.00
EQUIPMENT AND INSTALLATION TOTAL	**$ 31,674.00**
SHIPPING	$ 3,116.00

FEBRUARY 2024 ABBREVIATED REVIEW

THE HOWARD COMPANY

DRIVE-THRU FLEX

- Reliable
- Easy to read in all light sources
- Weatherproof
- Easy to maintain
- Cost-effective approach, as it comes with the option to interchange static displays

FEBRUARY 2024 ABBREVIATED REVIEW

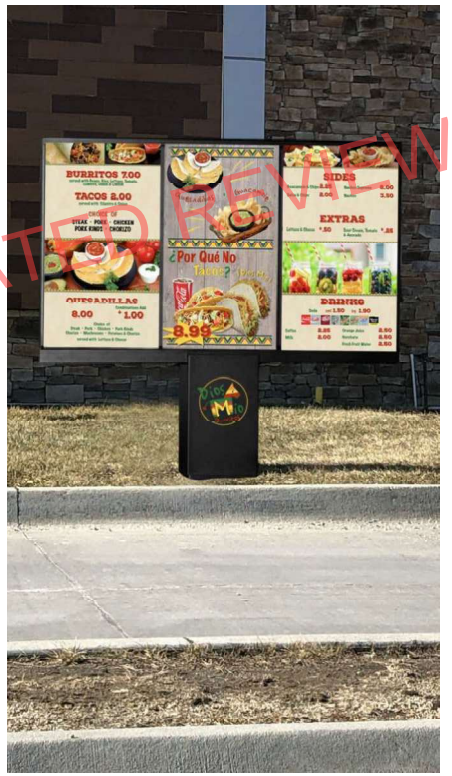

THE HOWARD COMPANY

DRIVE-THRU FLEX

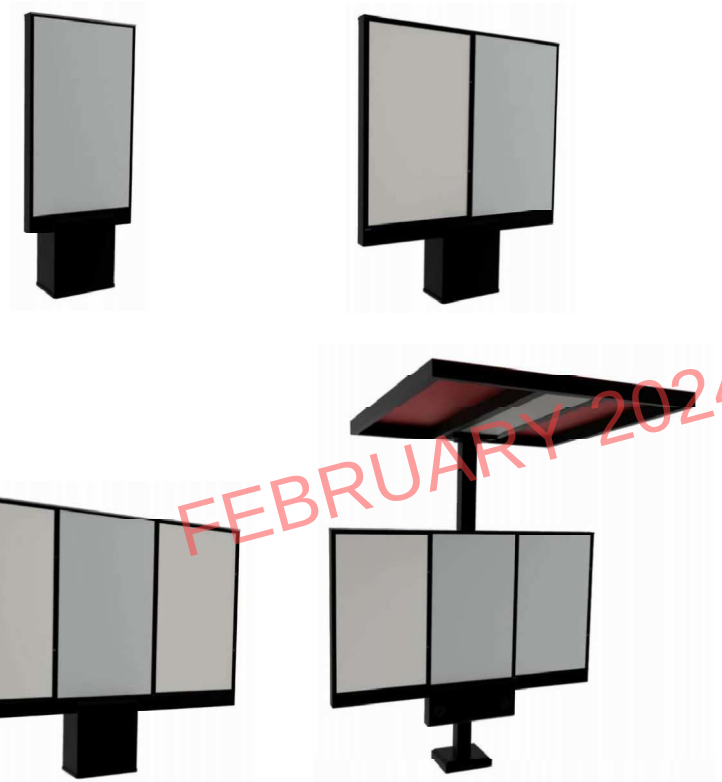

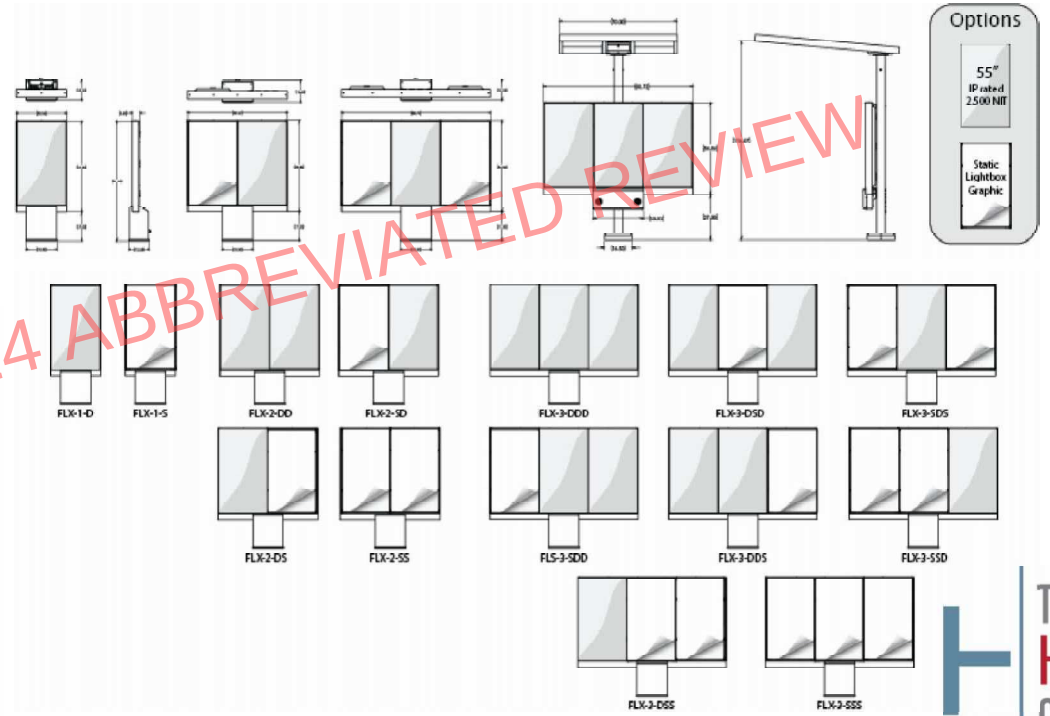

FEBRUARY 2024 ABBREVIATED REVIEW

THE HOWARD COMPANY

DRIVE-THRU ALL-IN-ONE SOLUTION

Our stand alone, all-in-one solution is a great solution for businesses with drive-thru lanes in confined areas.

- Includes:
  - Flat-top canopy
  - Menu board
  - Order confirmation system with a speaker and a microphone

FEBRUARY 2024 ABBREVIATED REVIEW

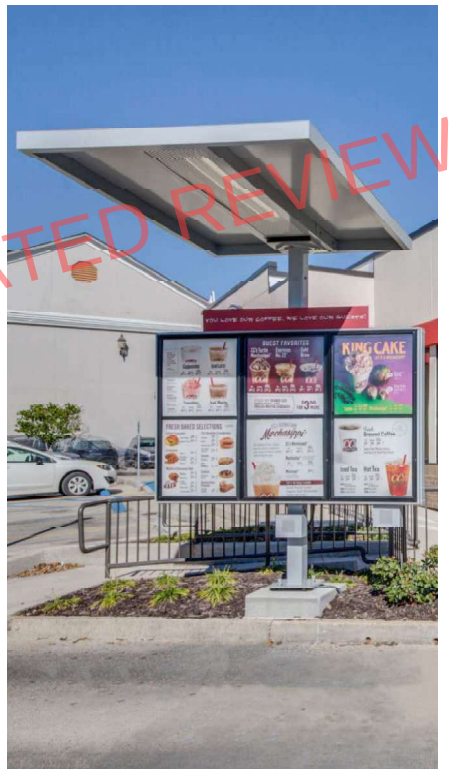

THE HOWARD COMPANY

DRIVE-THRU ALL-IN-ONE SOLUTION







FEBRUARY 2024 ABBREVIATED REVIEW

THE HOWARD COMPANY

DRIVE-THRU PRESELL BOARD

Advertise your offerings before your guests approach the main menu board with drive-thru presell boards!

- Available in print/static
- Advertise limited time offers (LTO's), combos and/or specials

FEBRUARY 2024 ABBREVIATED REVIEW



THE HOWARD COMPANY

Drive-Thru Stacking Design

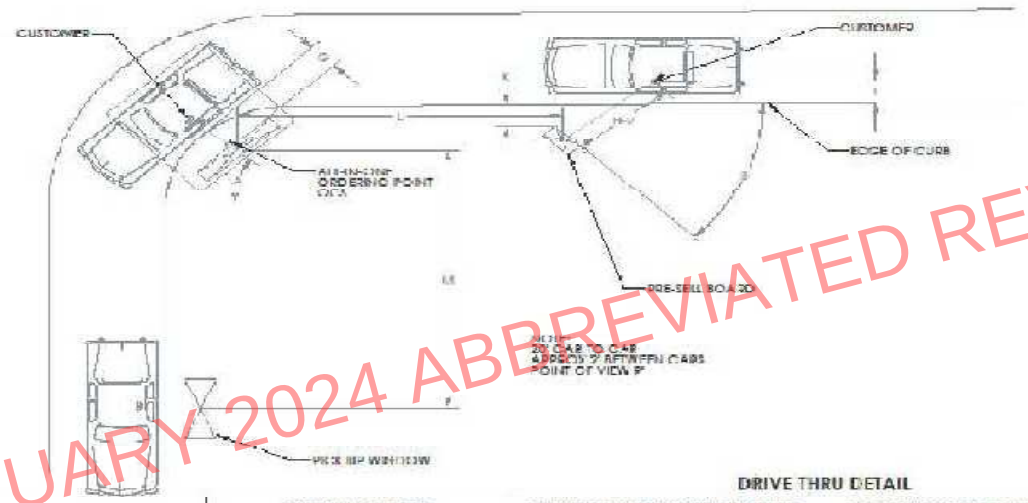

FEBRUARY 2024 ABBREVIATED REVIEW

DRIVE THRU DETAIL

	CURRENT (IF EXISTING)	RECOMMENDED FOR NEW PRODUCTS	RECOMMENDED SITE DIMENSIONS
A = ANGLE OF MENU			30 DEGREES
B = ANGLE OF PRE-SELL BOARD			45 DEGREES
G = ALL-IN-ONE TO CURB			30'
H-2 = PRE-SELL TO CUSTOMER			100'
I = CUSTOMER TO CURB			24'
K = PRE-SELL TO CURB			APPROX. 36
L = ORDERING POINT TO PRE-SELL			20'
M = ORDERING POINT TO PICK UP WINDOW			60'

THE HOWARD COMPANY
1575 North Baker Road Brookfield, WI 53045 1-800-782-6222 or Direct 1-262-782-6000
info@howardcompany.com www.howardcompany.com

Drive-Thru Stacking Design

THE HOWARD COMPANY
info@howardcompany.com www.howardcompany.com

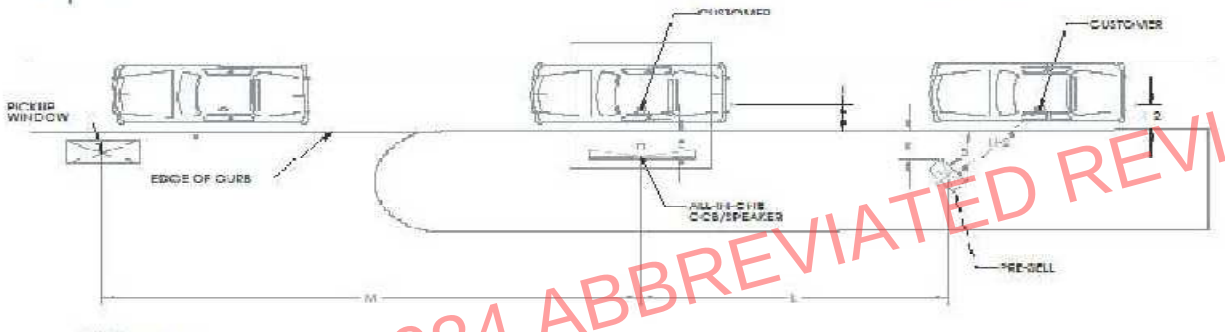

NOTE:
APPROX 2' BETWEEN CARS
POINT OF VIEW 'F'

	CURRENT IF EXISTING	RECOMMENDED FOR NEW PRODUCTS	RECOMMENDED DIMENSIONS
E= ALL-IN-ONE TO CURB M-2 = PRE-SELL TO CUSTOMER			
I = CUST. TO CURB I - 2 = CUST TO CURB			
J = BOLLARD			
K = PRE-SELL TO CURB L = ORDERING POINT TO PRE-SELL			CENTERLINE WITH MENU
M = PICKUP WINDOW TO ORDERING POINT			

FEBRUARY 2024 ABBREVIATED REVIEW

THE HOWARD COMPANY

Products for Flagship

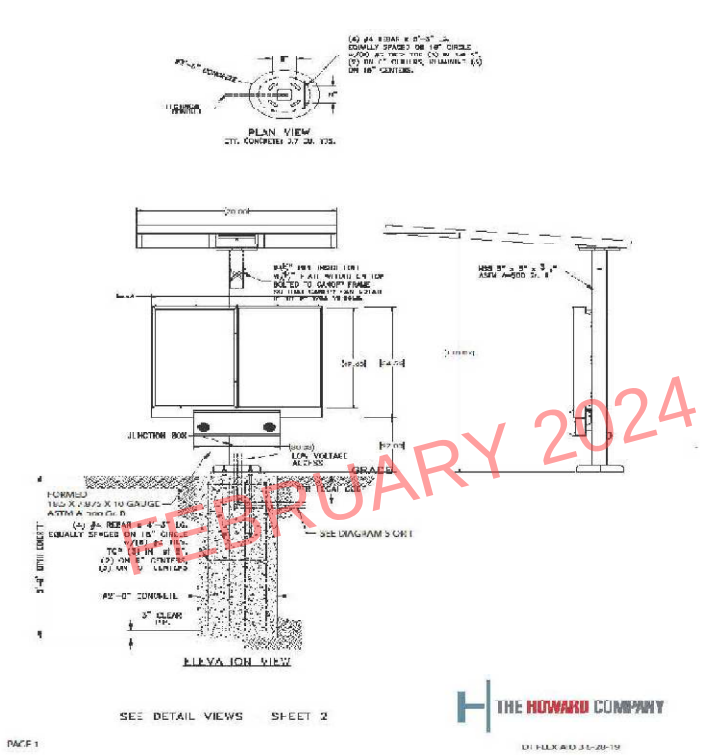

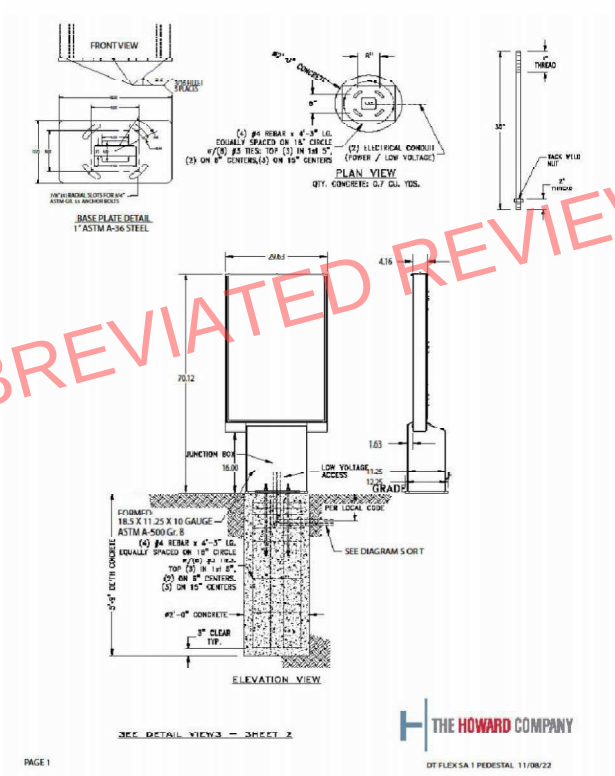

FEBRUARY 2024 ABBREVIATED REVIEW

THE HOWARD COMPANY

Drive-Thru Anatomy-Ideas for future

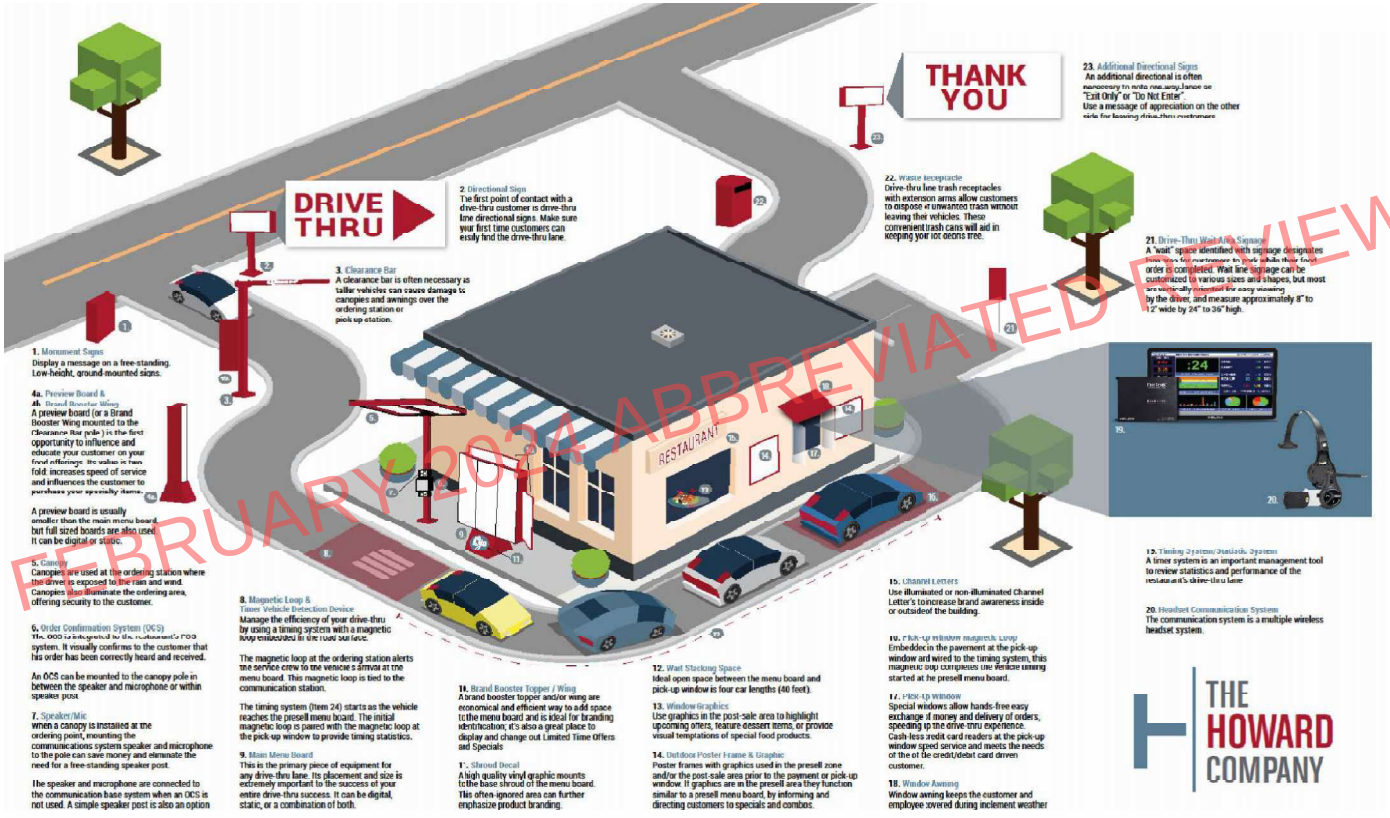

FEBRUARY 2024 ABBREVIATED REVIEW

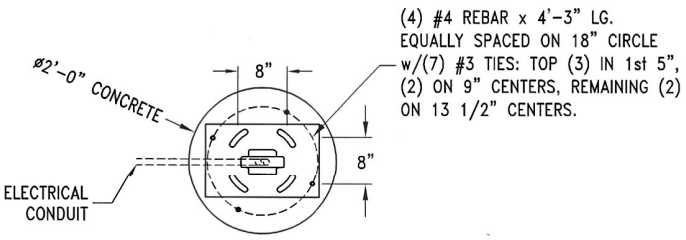

PLAN VIEW

QTY. CONCRETE: 0.6 CU. YDS.

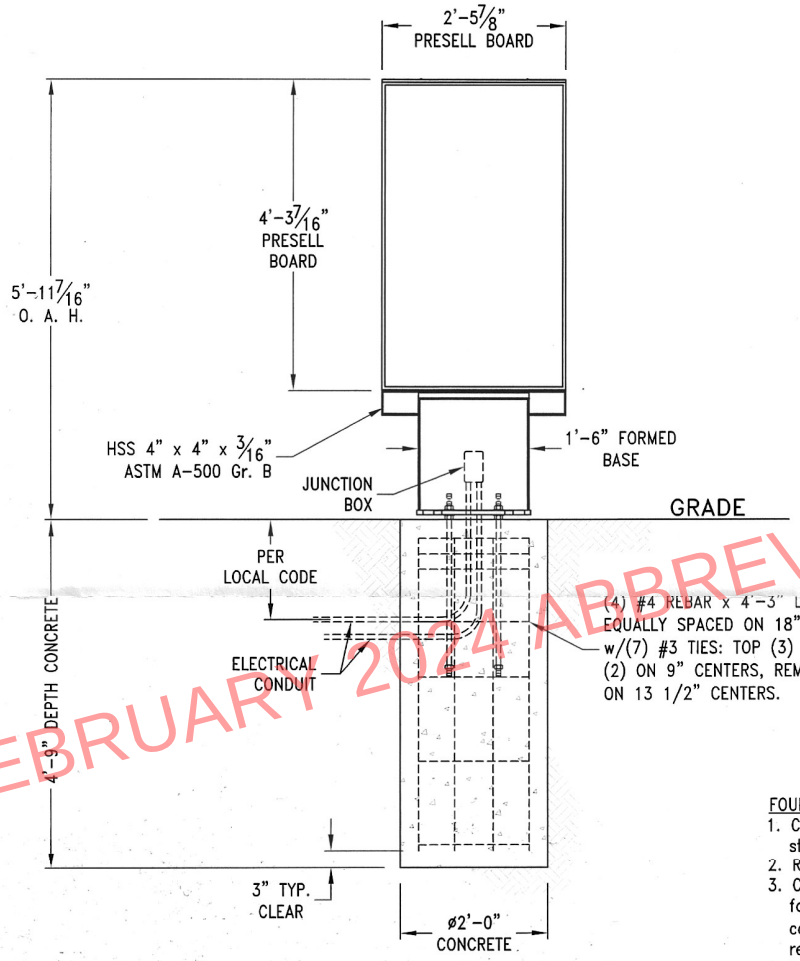

ELEVATION VIEW

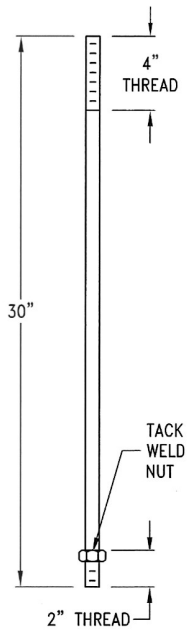

ANCHOR BOLT DETAIL

ø3/4" ASTM F-1554 Gr. 55 STEEL

FEBRUARY 2024 ABBREVIATED REVIEW

FOUNDATION DESIGN NOTES:

1. Concrete shall have a minimum compressive strength of 3000 PSI at 28 days.
2. Reinforcing steel shall be ASTM A-615 Gr. 60.
3. Caisson footing designed using a soil bearing force of 150 PSF per foot Lateral. If this soil condition does not exist, it is the Erector's responsibility to have a new base designed for the existing soil conditions by a Licensed Engineer.
4. Anchor bolts shall be ASTM F-1554 Gr. 55 steel.
5. All electrical work to be done according to the NEC and Local Code.

DESIGN WIND LOAD:

Based on the 2020 Florida Building Code, 7th Edition (ASCE 7-16) using Risk Category II, Exposure C and 155 mph wind speed.

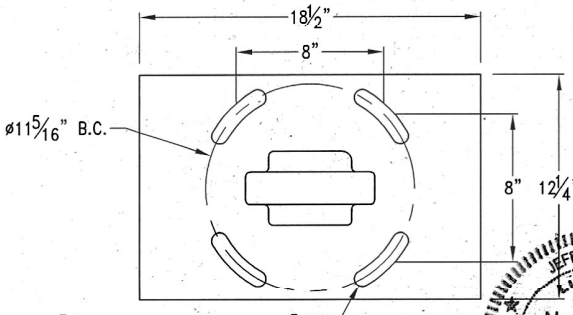

BASE PLATE DETAIL

1" ASTM A-36 STEEL

JEFF L. GRIFFIN
LICENSE
No. 43607
STATE OF FLORIDA
PROFESSIONAL ENGINEER

SITE:
Salad and Dash
10 South Jefferson Street
Pensacola, Florida 32502

REV	DATE	DESCRIPTION	APPROVED
A	04 Dec 23	RELEASED FOR PERMITTING	J. HOGAN

Robert-James & Associates, Inc.
12255 West 187th Street, Mokena Illinois 60448-9737
phone: 708-479-8385 fax: 708-479-8395 email: rja37@comcast.net

TITLE: 5'-11 7/16" OAH DRIVE-THRU PRESELL BOARD ON A CAISSON FOOTING

DRAWN BY	DATE	SCALE	DRAWING NUMBER	SHEET	REV.
A. KLOTZKE	04 Dec 23	NONE	2312025	1 OF 1	A
CHECKED BY J. HOGAN	DATE 04 Dec 23				

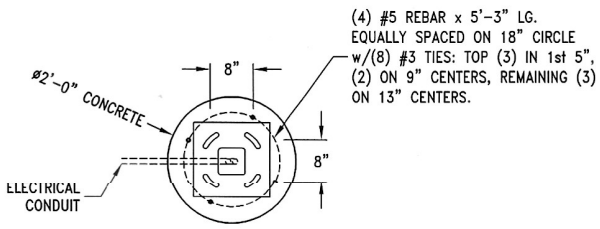

PLAN VIEW

QTY. CONCRETE: 0.7 CU. YDS.

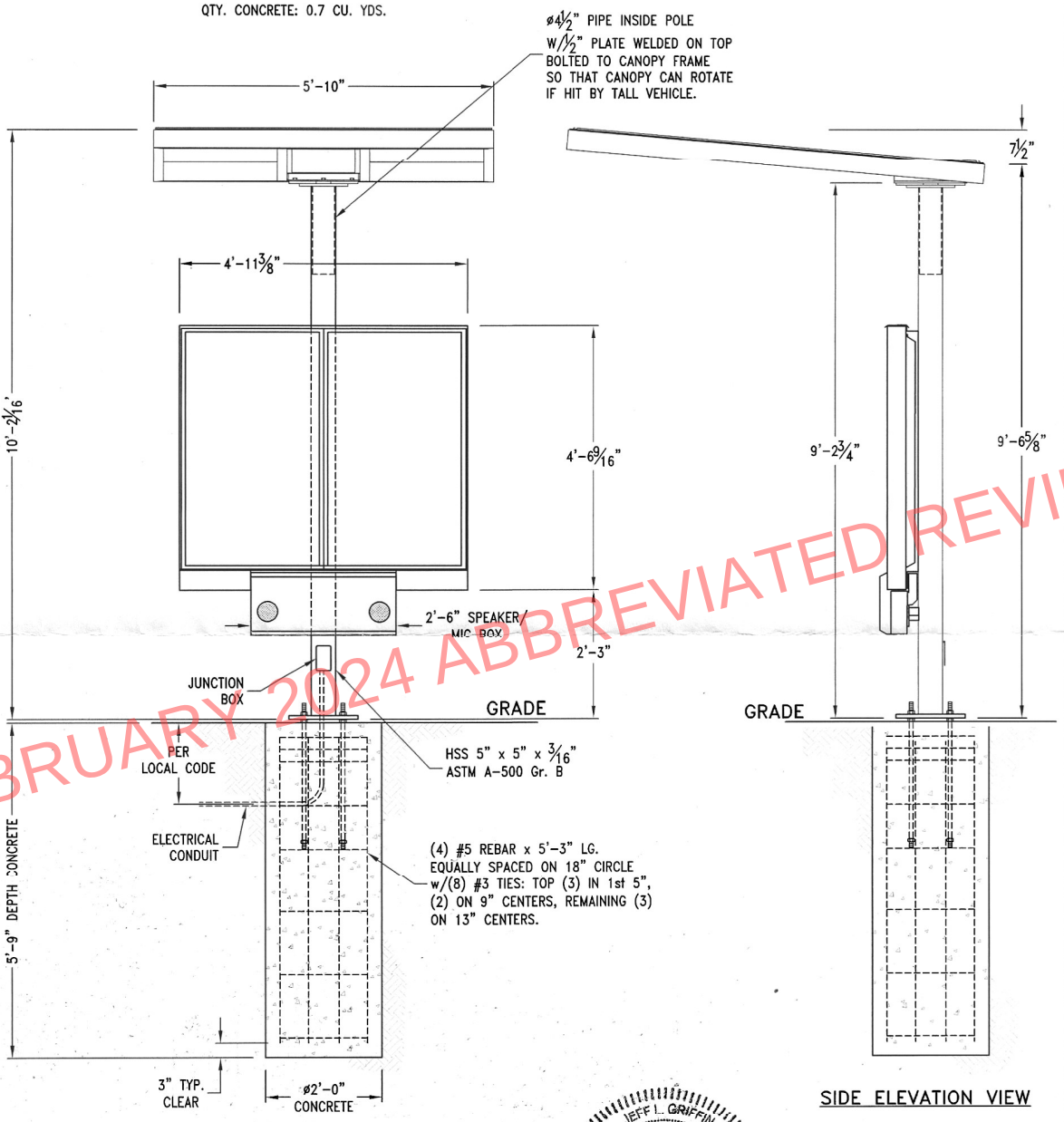

ELEVATION VIEW

SIDE ELEVATION VIEW

FEBRUARY 2024 ABBREVIATED REVIEW

JEFF L. GRIFFIN
LICENSE
No. 43607
STATE OF FLORIDA
PROFESSIONAL ENGINEER

FOUNDATION DESIGN & ENGINEERING NOTES:

1. Concrete shall have a minimum compressive strength of 3000 PSI at 28 days.
2. Reinforcing steel shall be ASTM A-615 Gr. 60.
3. Caisson footing designed using a soil bearing force of 150 PSF per foot Lateral. If this soil condition does not exist, it is the Erector's responsibility to have a new base designed for the existing soil conditions by a Licensed Engineer.
4. Anchor bolts shall be ASTM F-1554 Gr. 55 steel.
5. All electrical work to be done according to the NEC and Local Code.

DESIGN WIND LOAD:

Based on the 2020 Florida Building Code, 7th Edition (ASCE 7-16) using Risk Category II, Exposure C and 155 mph wind speed.

SEE DETAIL VIEWS – SHEET 2

SITE:
Salad and Dash
10 South Jefferson Street
Pensacola, Florida 32502

REV	DATE	DESCRIPTION	APPROVED
A	04 Dec 23	RELEASED FOR PERMITTING	J. HOGAN

Robert-James & Associates, Inc.
12255 West 187th Street, Mokena Illinois 60448-9737
phone: 708-479-8385 fax: 708-479-8395 email: rja37@comcast.net

TITLE: 10'-2 1/8" OAH SINGLE POLE DRIVE THRU CANOPY AND ORDER STATION

DRAWN BY	DATE	SCALE	DRAWING NUMBER	SHEET	REV.
A. KLOTZKE	04 Dec 23	NONE	2312024	1 OF 2	A
CHECKED BY J. HOGAN	DATE 04 Dec 23				

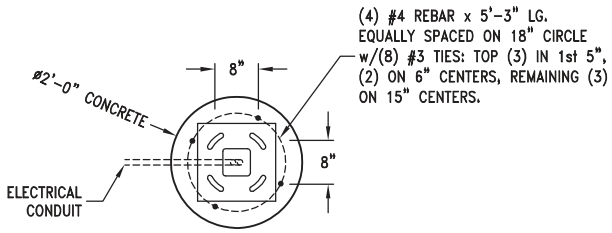

PLAN VIEW

QTY. CONCRETE: 0.7 CU. YDS.

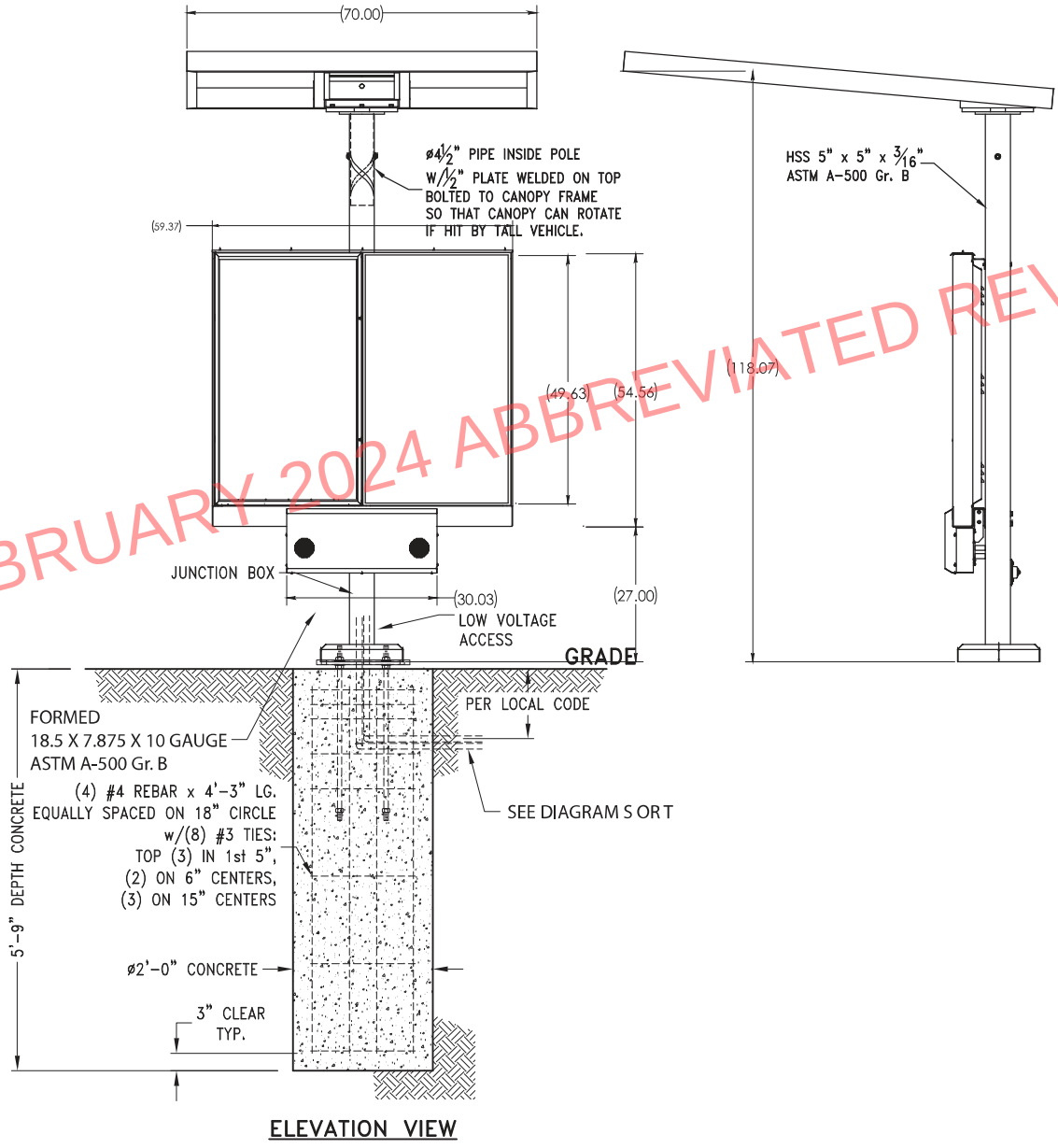

ELEVATION VIEW

SEE DETAIL VIEWS – SHEET 2

FEBRUARY 2024 ABBREVIATED REVIEW

THE HOWARD COMPANY

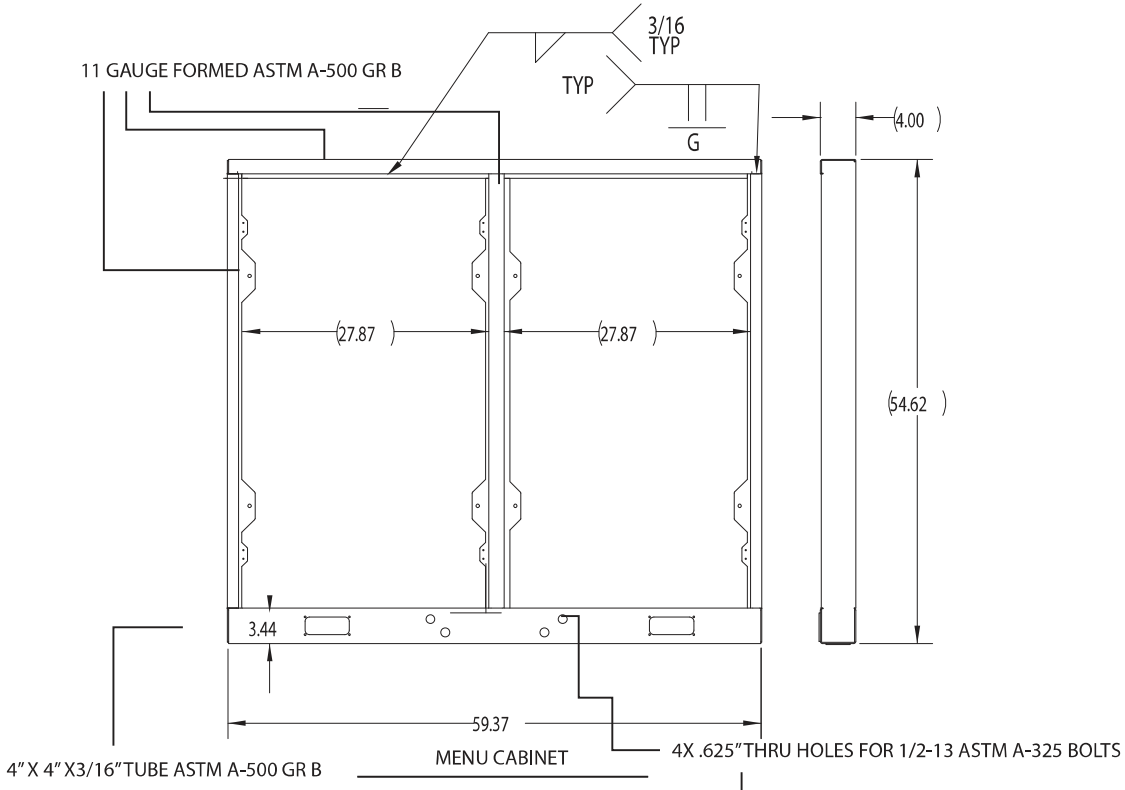

MENU CABINET

FEBRUARY 2024 ABBREVIATED REVIEW

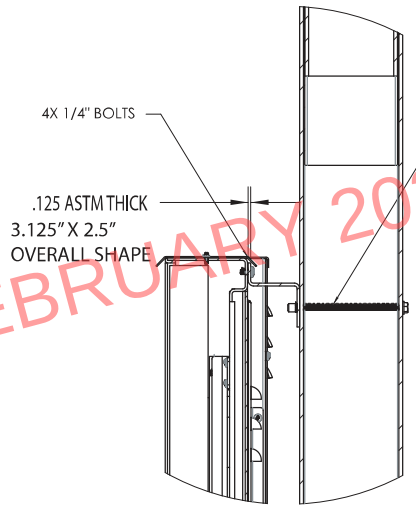

CUT AWAY VIEW TOP POLE TO CABINET CONNECTION

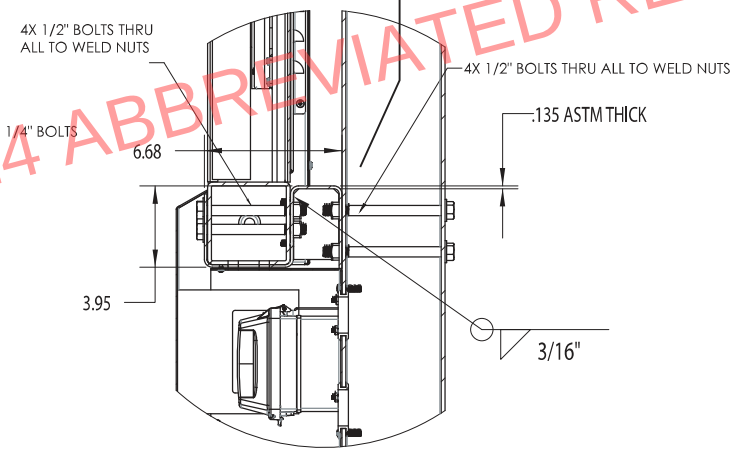

CUT AWAY VIEW BOTTOM POLE TO CABINET CONNECTION

THE HOWARD COMPANY

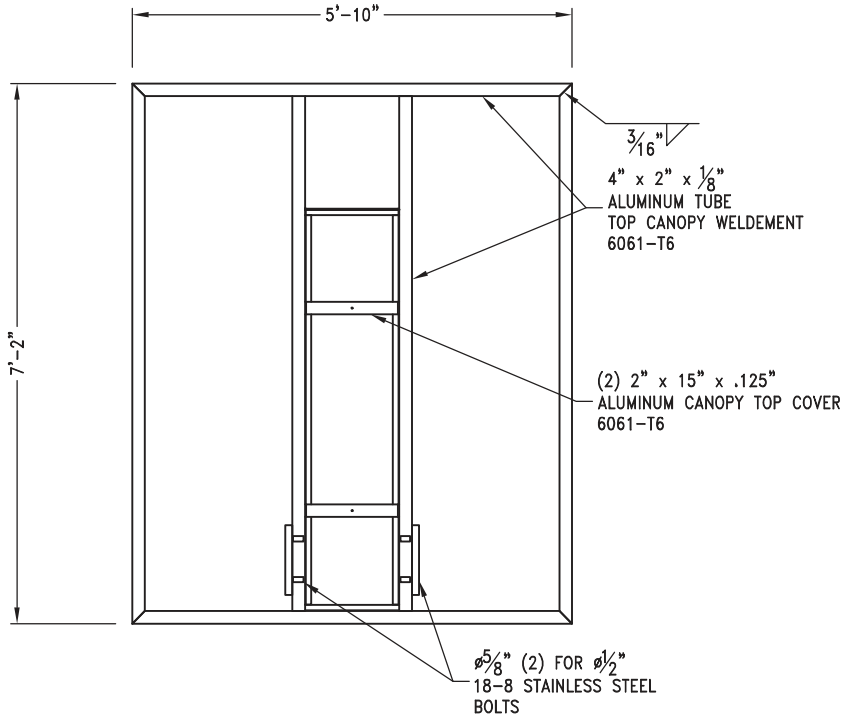

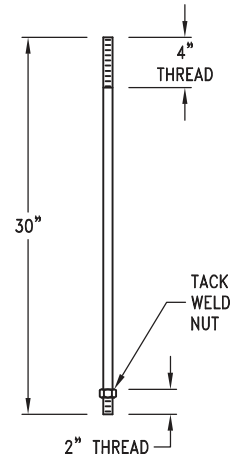

ANCHOR BOLT DETAIL

ø3/4" ASTM F-1554 Gr. 36 STEEL

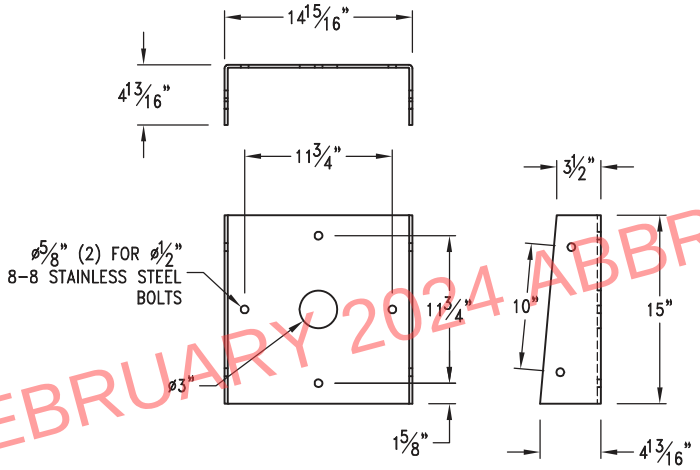

CANOPY TOP PIPE DETAIL

1/4" ASTM A-36 STEEL

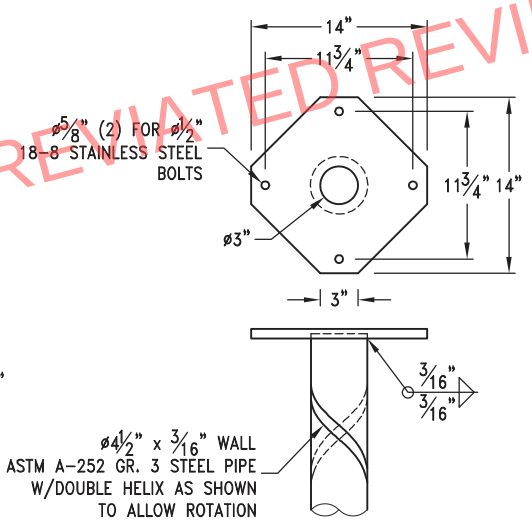

HELIX PIPE TOP PIPE DETAIL

1/2" ASTM A-36 STEEL

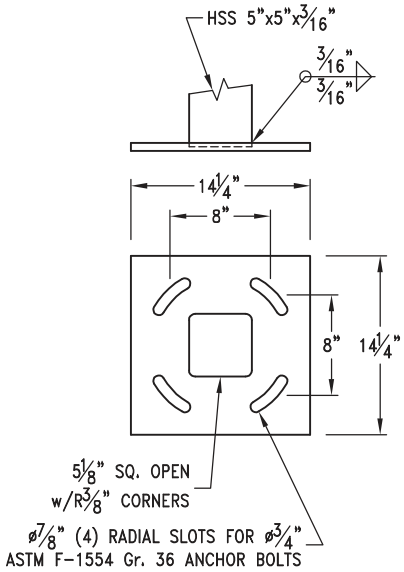

BASE PLATE DETAIL

3/4" ASTM A-36 STEEL

FEBRUARY 2024 ABBREVIATED REVIEW

THE HOWARD COMPANY

ROBERT-JAMES & ASSOCIATES, Inc.
12255 West 187th Street
Mokena, Illinois 60448
(708) 479-8385

File : HowardCo348a.mcd

Site : Salad and Dash
10 South Jefferson Street
Pensacola, Florida 32502

Project : 10'-2 1/16" overall height single pole with a 4-1/2" tall x 5'-10" wide x 7'-2" long angled canopy on a caisson footing. Pole has a 4'-6 9/16" x 4'-11 3/8" menuboard mounted on the pole 2'-3" above grade along with microphone and speaker box.
Drawing No. 2312024 rev. A sheets 1 and 2 of 2.

Design wind load based on the 2020 Florida Building Code, 7th Edition (ASCE 7-16) using Exposure C and 155 mph wind speed.

Design Wind Speed : (mph.) $V := 155.0$ Based on Risk Category II

Velocity Pressure Coefficient at a Height of Less Than 15', Exposure C : $Kz := 0.85$ Based on Table 29.3-1

Topographic Factor : $Kzt := 1.00$ Based on Table 26.8-1

Wind Directionality Factor : $Kd := 0.85$ Based on Table 26.6-1

Velocity Pressure : (PSF) $qz := 0.00256 \cdot Kz \cdot Kzt \cdot Kd \cdot V^2$ $qz = 44.437$ Based on 29.3-1

Force Coefficient : $Cf := 1.80$ Based on Figure 29.4-1

Gust Effect Factor : $G := 0.85$ Based on 26.9.4 for Other Structures

ASD Conversion Factor : $LCF := 0.60$

Design Pressure : (PSF) $F := qz \cdot Cf \cdot G \cdot LCF$ $F = 40.793$ Use : $WL := 40.8$

Design Snow Load : (PSF) $SL := 0.0$ N/A

FEBRUARY 2024 ABBREVIATED REVIEW

Reference : Manual of Steel Construction, AISC 13th Edition.

Tube : ASTM A-500 Gr. B Fy = 46.0 ksi. ; Fb = 30.36 ksi. ; Fv = 18.40 ksi.

Pipe : ASTM A-252 Gr. 3 Fy = 42.0 ksi. ; Fb = 27.72 ksi. ; Fv = 16.80 ksi.

Plate : ASTM A-36 Fy = 36.0 ksi. ; Fb = 27.00 ksi. ; Fv = 14.40 ksi.

Mounting Bolts : 18-8 Stainless Steel Fu = 60.0 ksi. ; Ft = 20.00 ksi. ; Fv = 10.00 ksi.

Anchor Bolts : ASTM F-1554 Gr. 36 Fu = 58.0 ksi. ; Ft = 19.14 ksi. ; Fv = 14.40 ksi.

Reference : 2020 Aluminum Design Manual, The Aluminum Association

Tube : 6061-T6 Temper and Alloy Fy = 27.0 ksi. ; Fb = 19.00 ksi. ; Fv = 12.00 ksi.

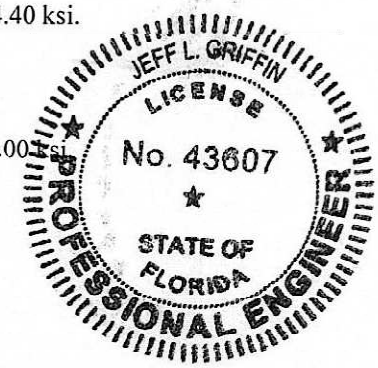

Reference : American Concrete Institute, Code 318.14

Rebar : ASTM A-615 Grade 60 Fy = 60.0 ksi.

Concrete : 3,000 psi. compressive strength at 28 days.

Design Loads at EL 9.26' : (Top of pole.)

Wind Load :

Shear : (lbs.) $ShrWL := (1.0 \cdot 7.12 \cdot WL)$ $ShrWL = 290.496$

Moment : (ft.lbs.) $MtWL := ShrWL \cdot \left(\frac{0.98}{2}\right)$ $MtWL = 142.343$

Offset Wind Load :

Shear : (lbs.) $ShrOSWL := (1.0 - 5.31 - WL)$ $ShrOSWL = 216.648$

Moment : (ft.lbs.) $MtOSWL := ShrOSWL \cdot \left(\left(\frac{5.31}{2}\right) + 0.93\right)$ $MtOSWL = 776.683$

Offset Dead Load :

Shear : (lbs.) $ShrOSDL := (5.83 \cdot 5.31 \cdot 8.5)$ $ShrOSDL = 263.137$

Moment : (ft.lbs.) $MtOSDL := ShrOSDL \cdot \left(\left(\frac{5.31}{2}\right) + 0.93\right)$ $MtOSDL = 943.346$

Offset Snow Load :

Shear : (lbs.) $ShrOSSL := (5.83 \cdot 5.31 \cdot SL)$ $ShrOSSL = 0$

Moment : (ft.lbs.) $MtOSSL := ShrOSSL \cdot \left(\left(\frac{5.31}{2}\right) + 0.93\right)$ $MtOSSL = 0$

Combined Shear :

Summation : (ft.lbs.) $ShrEL9_{26} := ShrOSWL + ShrOSDL + ShrOSSL$ $ShrEL9_{26} = 479.785$

FEBRUARY 2024 ABBREVIATED REVIEW

Design of Aluminum Tube Frame of Canopy :

Section Modulus of Tube - X Axis : (in.3) 4" x 2" x 1/8" wall - $XAxisSM := 1.51$

Moment per Tube - X Axis : (ft.lbs.) $MtTube_{xaxis} := \frac{MtOSDL + MtOSSL}{4}$ $MtTube_{xaxis} = 235.837$

Bending Stress - X Axis : (psi.) $f_{bxaxis} := \frac{MtTube_{xaxis} \cdot 12}{XAxisSM}$ $f_{bxaxis} = 1874.198$

Section Modulus of Tube - Y Axis : (in.3) 4" x 2" x 1/8" wall - $YAxisSM := 1.00$

Moment per Tube - Y Axis : (ft.lbs.) $MtTube_{yaxis} := \frac{MtWL + MtOSWL}{4}$ $MtTube_{yaxis} = 229.757$

Bending Stress - Y Axis : (psi.) $f_{byaxis} := \frac{MtTube_{yaxis} \cdot 12}{YAxisSM}$ $f_{byaxis} = 2757.078$

Area of Tube : (in.2) 4" x 2" x 1/8" wall - $TubeArea := 1.45$

Shear per Tube : (ft.lbs.) $ShrTube := \frac{ShrEL9_{26}}{4}$ $ShrTube = 119.946$

Bending Stress : (psi.) $f_v := \frac{ShrTube}{TubeArea}$ $f_v = 82.722$

Unity Check - Canopy Frame :

$UCCnpyFrm := \frac{f_{hxaxis}}{14670} + \frac{f_{byaxis}}{14670} + \frac{f_v}{12000}$ $UCCnpyFrm = 0.323$ < 1.00 OK

Design of Canopy Mounting Bolts :

Mounting Bolt Diameter : (in.) $MntBltDia := 0.50$

Stress Area : (in.2)
(Based on nominal diameter per AISC 4-3) $MntBltArea := \frac{\pi \cdot MntBltDia^2}{4}$ $MntBltArea = 0.196$

Allowable Tension : (lbs.) $AllwTen := 44000 \cdot MntBltArea$ $AllwTen = 8639$

Allowable Shear : (lbs.) $AllwShr := 21000 \cdot MntBltArea$ $AllwShr = 4123$

Number of Mounting Bolts in Tension Side to Side : $NoTenSS := 1$

Front to Back Bolt Bolt Centerlines : (in.) $FBLvrArm := 11.75$

Tension Load per Mounting Bolt : (lbs.) $TenBlt := \frac{(MtOSDL + MtOSSL) \cdot 12}{NoTenSS \cdot FBLvrArm}$ $TenBlt = 963.42$

FEBRUARY 2024 ABBREVIATED REVIEW

Number of Mounting Bolts in Shear : $NoShr := 4$

Number of Mounting Bolt Couples : $NoCpls := 2$

Side to Side Bolt Centerlines : (in.) $SSLvrArm := 11.75$

Diagonal Bolt Centerlines : (in.) $Diagonal := \sqrt{(SSLvrArm^2 + FBLvrArm^2)}$

$Diagonal = 16.617$

Shear per Mounting Bolt : (lbs.) $ShrBlt := \frac{ShrEL9_{26}}{NoShr} + \frac{(MtWL + MtOSWL) \cdot 12}{NoCpls \cdot Diagonal}$ $ShrBlt = 451.784$

Unity Check :
Mounting Bolts $UCMntBlts := \frac{TenBlt}{AllwTen} + \frac{ShrBlt}{AllwShr}$ $UCMntBlts = 0.221$ < 1.00 OK

Use : 1/2" diameter ASTM A-325 bolts and equivalent nuts and washers.

Design of Aluminum Canopy Bent Steel Mounting Plate at EL. 9.26' :

Plate Thickness : (in.) $PltThk := 0.250$ Plate Width : (in.) $PltWdth := 14.875$

Transfer Distance : (in.) $PLS := \frac{PltWdth - (SSLvrArm + (2 \cdot 1.0))}{2}$ $PLS = 0.563$

Minimum Thickness Required : (in.) $ReqdThk := \sqrt{\left(\frac{TenBlt \cdot NoTenSS \cdot PLS \cdot 6}{(PltWdth \cdot 27000)}\right)}$ $ReqdThk = 0.09$

Unity Check : $UCCnpyPlt := \frac{ReqdThk}{PltThk}$ $UCCnpyPlt = 0.36$ < 1.00 OK
Bent Steel Mounting Plate

Use : 1/4" thick x 4-13/16" x 14-15/16" x 4-13/16" bent channel x 15" long with four (4) 5/8" diameter holes on a 11-3/4" bolt circle.

Design of Insert Pipe Top Plate at EL. 9.26' :

Plate Thickness : (in.) $PltThk := 0.75$ Plate Width : (in.) $PltWdth := 14.94$

Transfer Distance : (in.) $PLS := 4.0$

Minimum Thickness Required : (in.) $ReqdThk := \sqrt{\left(\frac{TenBlt \cdot NoTenSS \cdot PLS \cdot 6}{(PltWdth \cdot 27000)}\right)}$ $ReqdThk = 0.239$

Unity Check : $UCInsrtTopPlt := \frac{ReqdThk}{PltThk}$ $UCInsrtTopPlt = 0.319$ < 1.00 OK
Insert Pipe Top Plate

Use : 3/4" thick x 14 x 14" plate with four (4) 5/8" diameter holes on a 11-3/4 bolt circle. plate has 4-7/8" 45 degree chamfer corners.

FEBRUARY 2024 ABBREVIATED REVIEW

Design of Insert Pipe at EL. 9.26' :

Pipe : 4-1/2" Dia. x 0.188" wall - Dia : (in.) $Dia := 4.5$

Radius : (in.) $r := \frac{Dia}{2}$ $r = 2.25$

Area : (in.2) $PipeArea := 2.55$

Section Modulus : (in.3) $PipeSM := 2.64$

Torsional Stiffness Constant : (in.4) $J := 11.86$

Bending Stress : (psi.) $f_b := \frac{(MtOSDL + MtOSSL) \cdot 12}{PipeSM}$ $f_b = 4287.938$

Shear Stress : (psi.) $fv := \frac{ShrEL9_{26}}{PipeArea}$ $fv = 188.151$

Torsional Stress : (psi.) $ft := \frac{(MtWL + MtOSWL \cdot 12) \cdot r}{J}$ $ft = 1795.17$

Combined Shear Stress : (psi.) $fv_{Comb} := \sqrt{((fv + ft)^2 + ft^2)}$ $fv_{Comb} = 2675.107$

Unity Check : $UCInsertPipe := \frac{f_b}{27720} + \frac{fv_{Comb}}{16800}$ $UCInsertPipe = 0.314$ < 1.00 OK
Insert Pipe

Design Loads at Grade : (Top of the footing.)

Wind Load :

Canopy : $Cnpy := (1.0 \cdot 5.83 \cdot WL) \cdot \left(\left(\frac{1.0}{2}\right) + 9.26\right)$ $Cnpy = 2321.553$ ft.lbs.

Upper Exposed Pole : $UprPole := \left(2.46 \cdot \left(\frac{5.0}{12}\right) \cdot WL\right) \cdot \left(\left(\frac{2.46}{2}\right) + 6.80\right)$ $UprPole = 335.815$ ft.lbs.

Menuboard : (Including audio box.) $Mnbd := (4.55 \cdot 4.95 \cdot WL) \cdot \left(\left(\frac{4.55}{2}\right) + 2.25\right)$ $Mnbd = 4158.104$ ft.lbs.

Lower Exposed Pole : $LwrPole := \left(2.25 \cdot \left(\frac{5.0}{12}\right) \cdot WL\right) \cdot \left(\frac{2.25}{2}\right)$ $LwrPole = 43.031$ ft.lbs.

Moment : (ft.lbs.) $MtWL := Cnpy + UprPole + Mnbd + LwrPole$ $MtWL = 6858.502$

Shear : (lbs.) $ShrWL := (1.0 \cdot 5.83 \cdot WL) + (4.55 \cdot 4.95 \cdot WL) + \left(4.71 \cdot \left(\frac{5.0}{12}\right) \cdot WL\right)$ $ShrWL = 1236.852$

Offset Wind Load :

Shear : (lbs.) $ShrOSWL := (4.0 \cdot 1.5 \cdot WL)$ $ShrOSWL = 244.8$

Moment : (ft.lbs.) $MtOSWL := ShrOSWL \cdot \left(\left(\frac{1.5}{2}\right) + 2.75\right)$ $MtOSWL = 856.8$

Offset Dead Load :

Shear : (lbs.) $ShrOSDL := (4.0 \cdot 1.5 \cdot 8.5)$ $ShrOSDL = 51$

Moment : (ft.lbs.) $MtOSDL := ShrOSDL \cdot \left(\left(\frac{1.5}{2}\right) + 2.75\right)$ $MtOSDL = 178.5$

Offset Snow Load :

Shear : (lbs.) $ShrOSSL := (1.5 \cdot 0.5 \cdot SL)$ $ShrOSSL = 0$

Moment : (ft.lbs.) $MtOSSL := ShrOSSL \cdot \left(\left(\frac{1.5}{2}\right) + 2.75\right)$ $MtOSSL = 0$

Combined Moment :

Summation : (ft.lbs.) $MtGrd := MtWL + MtOSDL + MtOSSL$ $MtGrd = 7037.002$

Combined Shear :

Summation : (lbs.) $ShrGrd := ShrWL + ShrOSDL + ShrOSSL$ $ShrGrd = 1287.852$

Design of Pole Structure at EL. 0.71' :

Tube : HSS 5" x 5" x 3/16" wall Area : (in.2) $TubeArea := 3.28$

Section Modulus : (in.3) $TubeSM := 5.03$

Torsional Stiffness Constant : (in.4) $C := 8.08$

FEBRUARY 2024 ABBREVIATED REVIEW

Bending Stress : (psi.) $fb := \frac{MtGrd \cdot 12}{TubeSM}$ $fb = 16788.077$

Shear Stress : (psi.) $fv := \frac{ShrGrd}{TubeArea}$ $fv = 392.638$

Torsional Stress : (psi.) $ft := \frac{(MtOSWL \cdot 12)}{C}$ $ft = 1272.475$

Combined Shear Stress : (psi.) $fv_{Comb} := \sqrt{((fv + ft)^2 + ft^2)}$ $fv_{Comb} = 2095.661$

Unity Check - Pole : $UCPole := \frac{fb}{30360} + \frac{fv_{Comb}}{18400}$ $UCPole = 0.667$ < 1.00 OK

Design of Anchor Bolts at Grade :

Anchor Bolt Diameter : (in.) $AncBltDia := 0.75$

Stress Area : (in.2)
(Based on nominal diameter per AISC 4-3) $AncBltArea := \frac{\pi \cdot AncBltDia^2}{4}$ $AncBltArea = 0.442$

Allowable Tension : (lbs.) $AllwTen := 19140 \cdot AncBltArea$ $AllwTen = 8456$

Allowable Shear : (lbs.) $AllwShr := 14400 \cdot AncBltArea$ $AllwShr = 6362$

Number of Anchor Bolts in Tension : $NoTen := 2$

Front to Back Distance Between Anchor Bolts : (in.) $LvrArm := 8.0$

Side to Side Distance Between Anchor Bolts : (in.) $BltSprd := 8.0$

Tension Load per Anchor Bolt : (lbs.) $TenAncBlt := \frac{MtGrd \cdot 12}{NoTen \cdot LvrArm} + \frac{(MtOSDL + MtOSSL) \cdot 12}{NoTen \cdot BltSprd}$

$TenAncBlt = 5411.63$

Number of Anchor Bolts in Shear : $NoShr := 4$

Number of Bolt Couples : $NoBltCpls := 2$

Diagonal Distance Between Anchor Bolts : (in.) $BltDiagnl := \sqrt{(LvrArm^2 + BltSprd^2)}$

$BltDiagnl = 11.314$

Shear Load per Anchor Bolt : (lbs.) $ShrAncBlt := \frac{ShrGrd}{NoShr} + \frac{(MtOSWL \cdot 12)}{NoBltCpls \cdot BltDiagnl}$

$ShrAncBlt = 776.35$

Unity Check : Anchor Bolts $UCAncBlts := \frac{TenAncBlt}{AllwTen} + \frac{ShrAncBlt}{AllwShr}$ $UCAncBlts = 0.762$ < 1.00 OK

Allowable Bond Stress : (lbs./ in.2) $U := \left(\frac{1}{2}\right) \cdot \left(\frac{4.8 \cdot \sqrt{3000}}{AncBltDia}\right)$ $U = 175.271$

FEBRUARY 2024 ABBREVIATED REVIEW

Development Length : (in.) $Ld := \frac{TenAncBlt}{U \cdot \pi \cdot AncBltDia}$ $Ld = 13.104$

Embedment Length : (in.) $AncBltEmb := 30 - 4.0$ $AncBltEmb = 26$
(30" overall length minus 4" of thread projection.)

Unity Check : $UCABEmb := \frac{Ld}{AncBltEmb}$ $UCABEmb = 0.504$ < 1.00 OK
Anchor Bolt Embedment

Use : Four (4) 3/4" Dia. x 30" anchor bolts with 4" of top thread and 2" of bottom thread.

Design of Base Plate at Grade :

Plate Thickness : (in.) $PltThk := 0.75$ Plate Width : (in.) $PltWdth := 14.25$

Transfer Distance : (in.) $PLS := \frac{BltDiagnl - \sqrt{(5.0^2 + 5.0^2)}}{2}$ $PLS = 2.121$

Minimum Thickness Required : (in.) $ReqdThk := \sqrt{\left(\frac{TenAncBlt \cdot NoTen \cdot PLS \cdot 6}{(PltWdth \cdot 27000)}\right)}$ $ReqdThk = 0.598$

Unity Check - Base Plate : $UCBasePlt := \frac{ReqdThk}{PltThk}$ $UCBasePlt = 0.798$ < 1.00 OK

Use : 3/4" thick x 14-1/4" x 14-1/4" base plate with four (4) 7/8" x 3-3/4" radial slots on a 11-5/16" bolt circle.

FEBRUARY 2024 ABBREVIATED REVIEW

Design of Caisson Footing :

Overturning Moment : (ft.lbs.)	$Ma := MtGrd$	$Ma = 7037.002$
Shear : (lbs.)	$Va := ShrGrd$	$Va = 1287.852$
Applied Lateral Force : (lbs.)	$P := Va$	$P = 1287.852$
Allowable Lateral Soil Pressure : (lbs./ft.2 per ft.)		$LP := 150$
Diameter of Round Footing : (ft.)		$b1 := 2.0$
Distance in Feet From Ground Surface to Point of Application of "P"	$h := \frac{Ma}{Va}$	$h = 5.464$
Depth of Footing Below Grade : (ft.)		$d1 := 5.75$
Allowable Lateral Soil Bearing Pressure Pursuant to the 2018 International Building Code Section 1807.3.2.1 and Table 1806.2 with 100% increase for allowable 1/2" deflection at grade.	$S1 := d1 \cdot \frac{(LP \cdot 1.33)}{3}$	$S1 = 382.375$
	$A := 2.34 \cdot \frac{P}{(S1 \cdot 2) \cdot b1}$	$A = 1.97$
	$d2 := \left(\frac{A}{2}\right) \cdot \left(1 + \left(\sqrt{1 + 4.36 \cdot \frac{h}{A}}\right)\right)$	$d2 = 4.55$ ≤ $d1 = 5.75$ OK

Check Tensile Stress in Footing :

Overturning Moment About Heel Point : (ft.lbs.) $Mh := Ma + (Va \cdot d1)$ $Mh = 14442.151$
Treat as a cantilever at bottom.

Compressive Strength of Concrete : (psi.) $fc := 3000$

Yield Strength of Rebar : (psi.) $fy := 60000$

Section Modulus of Footing : (in.3) $Sw := \frac{\pi \cdot (b1 \cdot 12)^3}{32}$ $Sw = 1357.168$

Tensile Stress in Concrete : (psi.) $ft := \left(\frac{(Mh \cdot 12)}{Sw}\right)$ $ft = 127.697$

Allowable Concrete Stress : (psi.) $\phi Ft := 0.65 \cdot (5 \cdot \sqrt{fc})$ $\phi Ft = 178.01 > ft = 127.697$
REBAR NOT REQUIRED FOR STRESS

Design of Temperature and Shrinkage Steel in Footing :

Moment for USD Design : $Mu := 1.7 \cdot Mh$ $Mu = 24551.657$

$d := ((b1 \cdot 12) \cdot .80) - 3$ $d = 16.2$

To Plot for " ju " : $coeff := \frac{Mu \cdot 12}{fc \cdot b1 \cdot 12 \cdot d^2}$ $coeff = 0.016$ $ju := 0.73$

Required Area : (in.2) $As := \frac{Mu \cdot 12}{ju \cdot fy \cdot d \cdot 0.90}$ $As = 0.461$

Rebar Size : $Number := 5$

Rebar Area : (in.2) $Area := \frac{\pi \cdot \left(\frac{Number}{8}\right)^2}{4}$ $Area = 0.31$

Number Required : $\left(\frac{As}{Area}\right) \cdot 2 = 3.008$ Use four (4) #5 Rebar x 5'-3" LG. equally spaced on a 18" circle with eight (8) #3 Rebar ties. The top three (3) ties in the first 5", two (2) on 9" centers and remaining three (3) on 13" centers.

Quantity of Concrete : (yds.3) $CY := \frac{\pi \cdot b1^2 \cdot d1}{4 \cdot 27}$ $CY = 0.669$

FEBRUARY 2024 ABBREVIATED REVIEW

ROBERT-JAMES & ASSOCIATES, Inc.
12255 West 187th Street
Mokena, Illinois 60448
(708) 479-8385

File : HowardCo348b.mcd

Site : Salad and Dash
10 South Jefferson Street
Pensacola, Florida 32502

Project : 4'-3 7/16" x 2'-5 7/8" presell board on a HSS 4" x 4" crossmember set in formed base at 5'-11 7/16" overall height on a caisson footing.
Drawing No. 2312025 rev. A

Design wind load based on 2020 Florida Building Code, 7th Edition (ASCE 7-16) using Exposure C and 155 mph wind speed.

Design Wind Speed : (mph.) $V := 155.0$ Based on Risk Category II

Velocity Pressure Coefficient at a Height of Less Than 15', Exposure C : $Kz := 0.85$ Based on Table 29.3-1

Topographic Factor : $Kzt := 1.00$ Based on Table 26.8-1

Wind Directionality Factor : $Kd := 0.85$ Based on Table 26.6-1

Velocity Pressure : (PSF) $qz := 0.00256 \cdot Kz \cdot Kzt \cdot Kd \cdot V^2$ $qz = 44.437$ Based on 29.3-1

Force Coefficient : $Cf := 1.80$ Based on Figure 29.4-1

Gust Effect Factor : $G := 0.85$ Based on 26.9.4 for Other Structures

ASD Conversion Factor : $LCF := 0.60$

Design Pressure : (PSF) $F := qz \cdot Cf \cdot G \cdot LCF$ $F = 40.793$ Use : $WL := 40.8$

FEBRUARY 2024 ABBREVIATED REVIEW

Reference : Manual of Steel Construction, AISC 13th Edition.

Tube : ASTM A-500 Gr. B Fy = 46.0 ksi. ; Fb = 30.36 ksi. ; Fv = 18.40 ksi.

Plate : ASTM A-36 Fy = 36.0 ksi. ; Fb = 27.00 ksi. ; Fv = 14.40 ksi.

Sheet Metal : ASTM A-36 Fy = 36.0 ksi. ; Fb = 23.76 ksi. ; Fv = 14.40 ksi.

Anchor Bolts : ASTM F-1554 Gr. 36 Fu = 58.0 ksi. ; Ft = 19.14 ksi. ; Fv = 14.40 ksi.

Reference : American Concrete Institute, Code 318.14

Rebar : ASTM A-615 Grade 60 Fy = 60.0 ksi.

Concrete : 3,000 psi. compressive strength at 28 days.

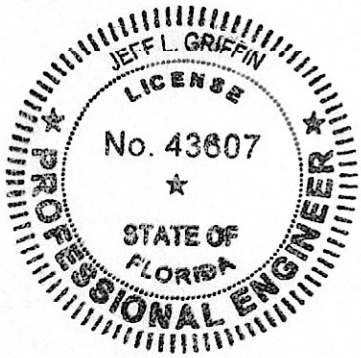

Design Loads at EL 1.67' : (Menuboard to crossmember tube.)

Shear : (lbs.) $ShrEL1_{67} := (4.28 \cdot 2.49 \cdot WL)$ $ShrEL1_{67} = 434.814$

Moment : (ft.lbs.) $MtEL1_{67} := ShrEL1_{67} \cdot \left(\frac{4.28}{2}\right)$ $MtEL1_{67} = 930.501$

Axial : (lbs.) $AxlEL1_{67} := (4.28 \cdot 2.49 \cdot 6.5)$ $AxlEL1_{67} = 69.272$

Design of Crossmember Tube at EL. 1.67' :

Tube : HSS 4" x 4" x 3/16" wall - Area : (in.2) $TubeArea := 2.58$

Section Modulus : (in.3) $TubeSM := 3.10$

Torsional Stiffness Constant : (in.4) $TubeC := 5.07$

Tube Weight : (lbs./ft.) $TubeWt := 9.40$

Length of Tube : (ft.) $L := 7.28$

Wind Load from the Crossbar : (lbs./ft.) $Wld := \left(\frac{4}{12}\right) \cdot WL$ $Wld = 13.6$

Shear Loads : (lbs.)

$V_1 := \frac{TubeWt \cdot L}{2} + \frac{AxlEL1_{67}}{2}$ $V_1 = 68.852$ $V_2 := \frac{Wld \cdot L}{2} + \frac{ShrEL1_{67}}{2}$ $V_2 = 266.911$

Shear Stresses : (lbs./in.2)

$fvx := \frac{V_1}{TubeArea}$ $fvx = 26.687$ $fvy := \frac{V_2}{TubeArea}$ $fvy = 103.454$

$fvt := \frac{(MtEL1_{67} \cdot 12)}{TubeC}$ $fvt = 2202.37$

Combined : $fv_{Comb} := \sqrt{(fvx + fvt)^2 + (fvy + fvt)^2}$ $fv_{Comb} = 3207.105$

FEBRUARY 2024 ABBREVIATED REVIEW

Bending Loads : (ft.lbs.)

$M_1 := \frac{TubeWt \cdot L^2}{12} + \frac{AxlEL1_{67} \cdot L}{8}$ $M_1 = 104.553$ $M_2 := \frac{Wld \cdot L^2}{12} + \frac{ShrEL1_{67} \cdot L}{8}$ $M_2 = 455.745$

Bending Stresses : (lbs./in.2)

$fbx := \frac{M_1 \cdot 12}{TubeSM}$ $fbx = 404.72$ $fby := \frac{M_2 \cdot 12}{TubeSM}$ $fby = 1764.176$

Combined : $fb_{Comb} := fbx + fby$ $fb_{Comb} = 2168.896$

Unity Check : Crossmember $UC_{Crsbr} := \frac{fv_{Comb}}{18400} + \frac{fb_{Comb}}{30360}$ $UC_{Crsbr} = 0.246$ < 1.00 OK

Design Loads at Grade :

Menuboard : (Including crossbar.) $BrdCrsbr := (4.62 \cdot 2.49 \cdot WL) \cdot \left(\left(\frac{4.62}{2}\right) + 1.33\right)$ $BrdCrsbr = 1708.452$ ft.lbs.

Fabricated Base : $Base := (1.33 \cdot 1.54 \cdot WL) \cdot \left(\frac{1.33}{2}\right)$ $Base = 55.572$ ft.lbs.

Moment : (ft.lbs.) $MtGrd := BrdCrsbr + Base$ $MtGrd = 1764.024$

Shear : (lbs.) $ShrGrd := (4.62 \cdot 2.49 \cdot WL) + (1.33 \cdot 1.54 \cdot WL)$ $ShrGrd = 552.922$

Design of Fabricated Base at Grade :

Base : 18-1/2" x 11-3/4" x 0.1345" (10 GA.)

Section Modulus of Base : (in.3) $BaseSM := 30.8$ (Weak axis)

Bending Stress : (psi.) $f_b := \frac{MtGrd \cdot 12}{BaseSM}$ $f_b = 687.282$

Area of Base : (in.2) $BaseArea := 7.61$

Shear Stress : (psi.) $f_v := \frac{ShrGrd}{BaseArea}$ $f_v = 72.657$

Unity Check : Fabricated Base $UCBase := \frac{f_b}{23760} + \frac{f_v}{14400}$ $UCBase = 0.034$ < 1.00 OK

Design of Anchor Bolts at Grade :

Anchor Bolt Diameter : (in.) $AncBltDia := 0.75$

Stress Area : (in.2) (Based on nominal diameter per AISC 4-3) $AncBltArea := \frac{\pi \cdot AncBltDia^2}{4}$ $AncBltArea = 0.442$

Allowable Tension : (lbs.) $AllwTen := 24750 \cdot AncBltArea$ $AllwTen = 10934$

Allowable Shear : (lbs.) $AllwShr := 18620 \cdot AncBltArea$ $AllwShr = 8226$

Number of Anchor Bolts in Tension : $NoTen := 2$

Front to Back Distance Between Anchor Bolts : (in.) $LvrArm := 10.0$ (Based on 14-1/8" bolt circle.)

Tension Load per Anchor Bolt : (lbs.) $TenAncBlt := \frac{MtGrd \cdot 12}{NoTen \cdot LvrArm}$ $TenAncBlt = 1058.41$

Number of Anchor Bolts in Shear : $NoShr := 4$

Shear Load per Anchor Bolt : (lbs.) $ShrAncBlt := \frac{ShrGrd}{NoShr}$ $ShrAncBlt = 138.23$

Unity Check : Anchor Bolts $UCAncBlts := \frac{TenAncBlt}{AllwTen} + \frac{ShrAncBlt}{AllwShr}$ $UCAncBlts = 0.114$ < 1.00 OK

Allowable Bond Stress : (lbs./ in.2) $U := \left(\frac{1}{2}\right) \cdot \left(\frac{4.8 \cdot \sqrt{4500}}{AncBltDia}\right)$ $U = 214.663$

FEBRUARY 2024 ABBREVIATED REVIEW

Development Length : (in.) $Ld := \frac{TenAncBlt}{U \cdot \pi \cdot AncBltDia}$ $Ld = 2.093$

Embedment Length : (in.) $AncBltEmb := 30 - 4$ $AncBltEmb = 26$
(30" overall length minus 4" of thread projection.)

Unity Check : Anchor Bolt Embedment $UCABEmb := \frac{Ld}{AncBltEmb}$ $UCABEmb = 0.08$ < 1.00 OK

Use : Four (4) 3/4" Dia. x 30" anchor bolts with 4" of top thread and 2" of bottom thread.

Design of Base Plate at Grade :

Plate Thickness : (in.) $PltThk := 1.00$ Plate Width : (in.) $PltWdth := 18.50$

Side to Side Distance Between Anchor Bolts : (in.) $BltSprd := 8.0$

Transfer Distance : (in.) $PLS := \frac{PltWdth - BltSprd}{2}$ $PLS = 5.25$

Minimum Thickness Required : (in.) $ReqdThk := \sqrt{\left(\frac{TenAncBlt \cdot NoTen \cdot PLS \cdot 6}{(PltWdth \cdot 27000)}\right)}$ $ReqdThk = 0.365$

Unity Check - Base Plate : $UCBasePlt := \frac{ReqdThk}{PltThk}$ $UCBasePlt = 0.365$ < 1.00 OK

Use : 1" thick x 18-1/2" x 12-1/4" base plate with four (4) 7/8" x 4" radial slots on a 11-5/16" bolt circle.

FEBRUARY 2024 ABBREVIATED REVIEW

Design of Caisson Footing :

Overturning Moment : (ft.lbs.)	$Ma := MtGrd$	$Ma = 1764.024$
Shear : (lbs.)	$Va := ShrGrd$	$Va = 552.922$
Applied Lateral Force : (lbs.)	$P := Va$	$P = 552.922$
Allowable Lateral Soil Pressure : (lbs./ft.2 per ft.)		$LP := 150$
Diameter of Round Footing : (ft.)		$b1 := 2.0$
Distance in Feet From Ground Surface to Point of Application of "P"	$h := \frac{Ma}{Va}$	$h = 3.19$
Depth of Footing Below Grade : (ft.)		$d1 := 4.75$
Allowable Lateral Soil Bearing Pressure Pursuant to the 2018 International Building Code Section 1807.3.2.1 and Table 1806.2.	$S1 := d1 \cdot \frac{(LP \cdot 1.33)}{3}$	$S1 = 315.875$

$$A := 2.34 \cdot \frac{P}{S1 \cdot b1} \qquad A = 2.048$$

$$d2 := \left(\frac{A}{2}\right) \cdot \left(1 + \left(\sqrt{1 + 4.36 \cdot \frac{h}{A}}\right)\right) \qquad d2 = 3.882 \leq d1 = 4.75 \quad \text{OK}$$

Check Tensile Stress in Footing :

Overturning Moment About Heel Point : (ft.lbs.) $Mh := Ma + (Va \cdot d1)$ $Mh = 4390.402$
Treat as a cantilever at bottom.

Compressive Strength of Concrete : (psi.) $fc := 3000$

Yield Strength of Rebar : (psi.) $fy := 60000$

Section Modulus of Footing : (in.3) $Sw := \frac{\pi \cdot (b1 \cdot 12)^3}{32}$ $Sw = 1357.168$

Tensile Stress in Concrete : (psi.) $ft := \left(\frac{(Mh \cdot 12)}{Sw}\right)$ $ft = 38.82$

Allowable Concrete Stress : (psi.) $\phi Ft := 0.65 \cdot (5 \cdot \sqrt{fc})$ $\phi Ft = 178.01$ > $ft = 38.82$

REBAR NOT REQUIRED FOR STRESS

Design of Temperature and Shrinkage Steel in Caisson :

Moment for USD Design : $Mu := 1.7 \cdot Mh$ $Mu = 7463.683$

$d := ((b1 \cdot 12) \cdot .80) - 3$ $d = 16.2$

To Plot for " ju " : $coeff := \frac{Mu \cdot 12}{fc \cdot b1 \cdot 12 \cdot d^2}$ $coeff = 0.005$ $ju := 0.62$

Required Area : (in.2) $As := \frac{Mu \cdot 12}{ju \cdot fy \cdot d \cdot 0.90}$ $As = 0.165$

Rebar Size : $Number := 4$

Rebar Area : (in.2) $Area := \frac{\pi \cdot \left(\frac{Number}{8}\right)^2}{4}$ $Area = 0.2$

Number Required : $\left(\frac{As}{Area}\right) \cdot 2 = 1.682$

Use four (4) #4 Rebar x 4'-3" LG. equally spaced on a 18" circle with eight (8) #3 Rebar ties. The top three (3) ties in the first 5", three (3) on 6" centers and the remaining two (2) on 13-1/2" centers.

Quantity of Concrete : (yds.3) $CY := \left(\frac{\pi \cdot b1^2 \cdot d1}{4 \cdot 27}\right)$ $CY = 0.553$

FEBRUARY 2024 ABBREVIATED REVIEW